Patents from the Jožef Stefan Institute
1999-2018

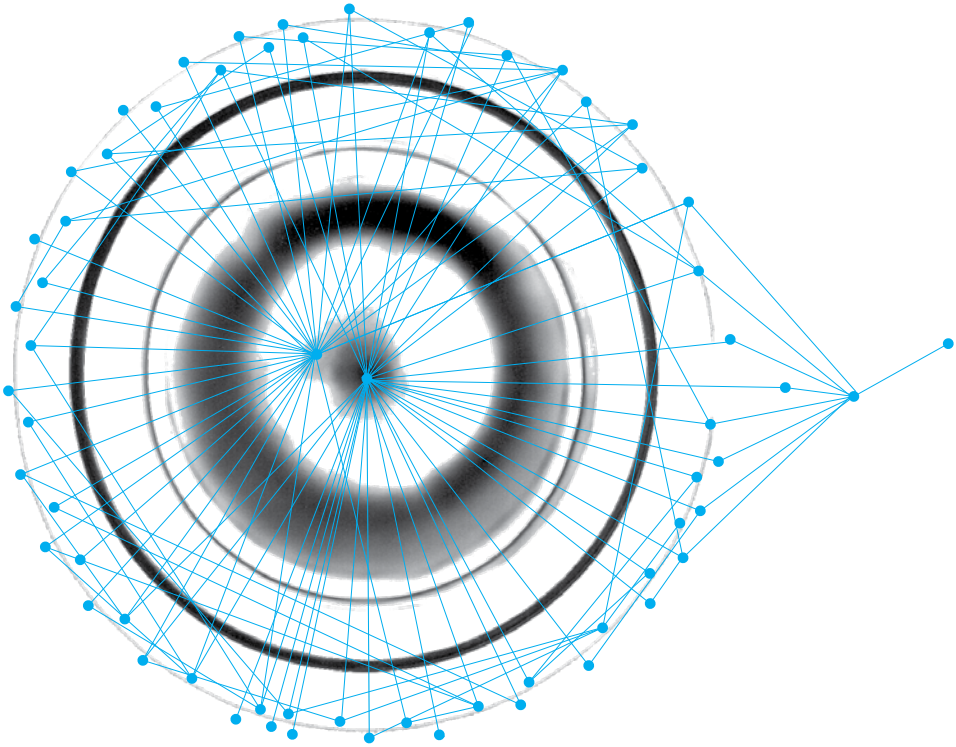

center for technology transfer and innovation
at the Jožef Stefan Institute

Jožef Stefan Institute, Ljubljana, Slovenia

Introduction

THE PATENT SYSTEM HAS HISTORICALLY ARISEN to support innovation. Observing that inventors would not be motivated to create if the financial fruits of their inventions would have been in general taken by others, already the Venetians introduced a patent system similar to the one we know today.[i] In the 17th century Queen Anna introduced one of the first biased patent systems, supporting more transfer of technology from other countries to England than inventions themselves – today this would be called "inventions new for the company" or "new for the country" (but not "new for the market"). This English policy introduced patents as privileges for marketing but decoupled them from inventors and could be seen as one of the first anomalies of the patent system.

Today this anomaly has grown to a much larger extent. Currently, investment (in finance and time) in research and development is predominantly made by corporations rather than by individuals. "Patent wars" are usually fought between large enterprises; individuals have a considerably more difficult position to defend when commercialization of patents is in question. The territorial principle is part of the core of the patent system, which consequently results in non-transparent international protection of intellectual rights.[ii] [iii] Intellectual property is of high importance for the development of particular peoples, companies, countries. Indeed, the use of the legally protected intellectual property for development of the country is a strategic decision that can not be done overnight.

The patent system has many positive and less positive aspects; therefore, many experts from various universities call for reform of this system to realize its prime objective – "to support and encourage innovativeness". The "deadweight loss" of monopoly in the case of a patent is smaller than in the case of "reverse engineering" (some theories claim). The "secret know-how", which the competition can attain only with reverse research activities and calculations[iv] is not even known to the research community when it is more useful for business to retain an invention secretive than to patent it. On the other hand, the pharmaceutical giants have greeted the TRIPS treaty in Ar-

---

[i] Nard, Craig Allen. The Law of Patents. Wolters Kluwer Publishing, 2008.

[ii] Ubertazzi, Benedetta. Exclusive Jurisdiction in Intellectual Property (Studien Zum Auslandischen Und Internationalen Privatrecht). Mohr Siebeck, 2012.

[iii] Crouch, Dennis (2007, February 1). "Voda v. Cordis: Plaintiff May Not Assert Foreign Patents in US Courts". Voda v. Cordis (Fed. Cir. 2007). Retrieved Jan. 2018, http://www.patentlyo.com/patent/2007/02/voda_v_cordis_p.html

[iv] Franzoni, Luigi Alberto. "Weak Intellectual Property Rights, Research Spill-Overs and The Incentive to Innovate", with V. Denicolò, in American Law and Economics Review, 2012, 14/1, 111-140

ticle 27, where the rights for patenting for microbiological processes are explicitly stated. Chakrabarty[v] has opened a path for patenting microorganisms. Consequently, it is currently for example possible to prevent the use of much cheaper tests than standard tests for breast cancer incidence, because the corporation owns patents over the genome in question.

A patent is an invention embodied in a specific, predetermined form, for which after a certain amount of reviewing it was determined that it comprises new, economically applicable and unexpected enough content to satisfy the criterion of inventive step. An Intellectual Property Office implements the check-up procedure on the appropriateness of the content and of the patent application design. If all three reviews of the material are performed before the patent is granted, we say that the patent application has undergone a complete examination.

A patent is a contract between an individual (natural or legal person) and a state, which provides the individual with a negative right. This time-limited monopoly prevents others from using his intellectual property, in exchange for public disclosure of the invention. The Intellectual Property Office provides support to the society by ensuring that the contract between the state and individuals may only be concluded by an individual whose invention satisfies a predetermined relatively high substantive criteria.

Many patents never reach the step of being filed as PCTs or European, US, ... patent applications, simply because the procedures cost too much. It would be essential to increase the number of patents filed from Slovenian inventors.

However, the patent by itself does not guarantee the quality of invention, and even less it guarantees its market success. A (breakthrough) invention is not a guarantee for the quality of the patent application. High quality of research work and quality of the research-generated intellectual property are not necessarily directly linked. An obscure invention can yield a high-quality patent, and a breakthrough invention can yield a poorly written one. However, a high-quality patent could provide a possibility for a high-quality appearance on the market (even if an obscure invention is in question).

Lastly, an invention, although protected as intellectual property, is not necessarily contributing to a more competitive (domestic) economy. The perhaps more important question is how many patents are bought from the Slovenian public research organisations by the local economy? What is expected of Slovenian science by the domestic economy?

There are reasonable grounds for commercialization of IPR in Slovenia. How-

[v] Diamond v. Chakrabarty, 447 U.S. 303 (1980), No. 79-136, Decided June 16, 1980

ever, a system should be developed to exploit this potential fully. The most would be done if the complete path of commercialization would be supported, acknowledging that the commercialization path begins with the idea, and continues with evaluation, drafting of the patent, filing of the patent, appraisal of further commercialization possibilities, either developing a product or marketing the patent for licensing and finally sales of a product or licensing.

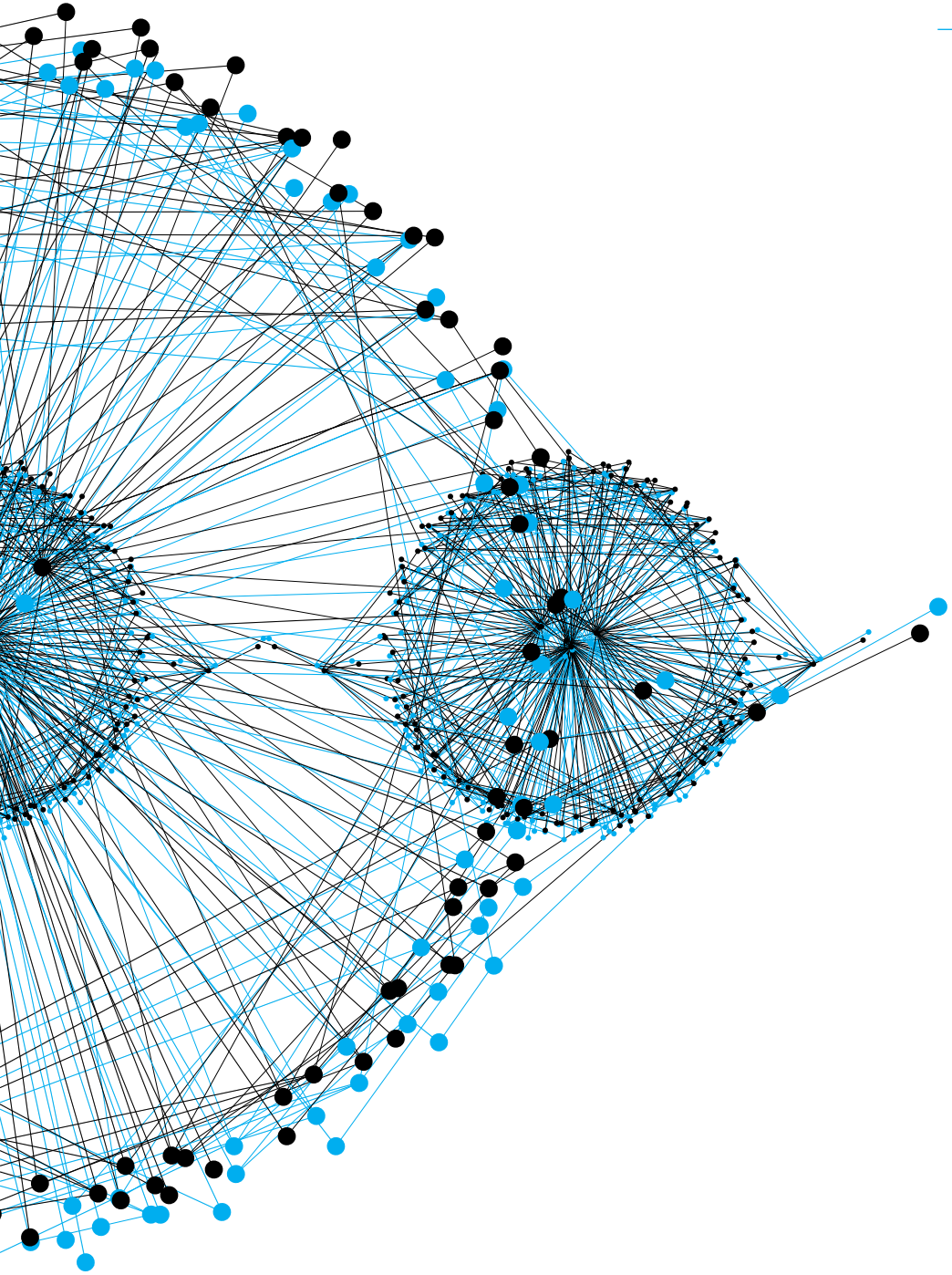

Table of Contents

Introduction 2

Jožef Stefan Institute (JSI) 19

Center for Technology Transfer and Innovation (CTT) 19

Introductory explanations 21

Patents from the Jožef Stefan Institute 1999-2018 23

Electronics, IT and Telecommunications 24

2018
- A Smart Home Control System Using Artificial Intelligence 24
- Method and System for Model Integration in Ensemble Learning 26

2017
- System and Procedure for Managing the Electrical Power of the Cooling System by Regulating the Product Temperature and Air Temperature 27
- Cardan Joint 28

2014
- Search Device for RDF Data and Search Method for RDF Data 31
- Method and System for Detecting a Person Driving a Vehicle while Using a Mobile Computing Device 32
- Method and System for Context-based Activity Recognition 34
- Device and Method for Acquisition and Transfer of Signals 35

2013
- Process of Identifying the Person Who Enters into the Space 38
- A Procedure and a Device for Non Invasive Control of Internal Temperature Variables in Real Time Between the Therapy with Cooling and Heating 39
- Interactive Door System 41
- The Procedure of the Fast Filtration of the Signal of the Rotation Speed with the Automatic Elimination of the Periodic Offset 43
- The Device and the Procedure for Constant Monitoring of the State of the Lubricant and Its Partical Content 44

2012
- Procedure and Device for Word Context Window Deployment 46
- System and Method for Continuous Supervision and Control the Production Process of Tablets 47
- Method for Intelligent Control of Operation of Cooling Unit 49
- Humanoid Torso Mechanism 50
- System for Select of Offers and Design Requirements in the Adjusment of Consumption and Distributed Electrical Generation 52

2011
- Intelligent Security System and Method for Detection of Unusual Behaviour 54

2010
- Method for Self Organizing Network Operation 56
- Iterative Localization Techniques 57

2008
- Reducing Oscillations in a Control System 59

Procedure for Measurement of Inner Dimensions of Footwear 63

System and Device for Speech-controlled Telephone Communication 64

Adaptive Device for Controlling Household Appliances 66

2007 Device and Procedure for the Transfer of a Personal Nutrition Table and Reference Values for the Intake of Food from a Computer Program to a Kitchen Scale 67

2006 Optical Device and Procedure for Displaying Images Permanently Visible from All Sides 69

Procedure for Performing Division by an Arithmetic Divisor with Continuous Settlement 70

2005 Circuit for Locking of a Test Bus 72

2004 Method for High Level Authentication and Protection of Communication Channels by Way of Message Authentication Codes 74

2003 Device for Displaying Images Within 360 Degrees Around the Device 76

2002 Procedure and Device for Radio Transmission of Data with Adjustable Bit Speed Based on N-MSK Signals 78

Detector Assembly and Device for Measuring the Sparking Intensity of Collector Engines 79

Self-tuning Controller for Non-linear Processes Described by Set of Local Linear Models 80

2001 Procedure and Circuit for Temperature Control 83

Connection Network for Correctly Distributed Modules 84

Procedure and Circuit for Measuring Temperature with Distributed, Frequency Dependant Structures 85

2000 Process and Device for Detecting MAMSK Signal by Remodulation 87

3D Sensitive Board 88

1999 Procedure and Device for Measuring Elements of Movement and Force Dynamics, Which Affect Individual Particles in the Natural Environment, Particularly in Sandbanks of Running Waters 91

Nanotechnology and New Materials 94

2018 A Method for Recovery of Nd2Fe14B Grains from Bulk Sintered Nd-Fe-B Magnets and / or Magnet Scraps by Electrochemical Etching 94

Method for Treatment Medical Devices Made from Nickel - Titanium (NiTi) Alloys 97

Carbon Nanostructured Materials and Methods for Forming Carbon Nanostructured Materials 99

2017 Electro-conductive Reinforced Engineering Ceramics and Preparation Therefore 101

Method for Coating a Medical Device, Especially a Vascular Stent 102

A Coating for Improved Tissue Adhesion 103

Bi, Pr and V-free Novel ZnO Voltage-sensitive Ceramic Material and Preparation Method Thereof 105

2016 Methods for Obtaining Salts of Silver(II) and Hydrates Thereof, Products Obtained by the Methods and Use of the Same 107

Method for Modification of Organic Compound Particles Structure, Reactants Used in This Method and Products Obtained by This Method 109

A Vibration System and a Filtering Plate for Filtering Substances 110

2015 Method of Growing Carbon Nanowalls on a Substrate 114

Method for Immobilization of Heparin on a Polymeric Material 116

Method for Coupling Molecules of Organic Compounds 117

Method for Treatment of Tools and Tools Used for Isolation of Microvesicles, Nanovesicles or Exosomes 119

A Method to Produce Foam Glasses 122

Metal-bonded RE-Fe-B Magnets 123

Process for the Synthesis of the Molybdenum Carbide in the Form of Quasi-one-dimensional Structures, That Is, Nano-wires, Micro-wires, Nano-strips and Micro-strips 125

2014 Method for Producing Steatite Ceramics of C 221 Type with Improved Electrical Properties 127

Steatite Ceramics with Improved Electrical Properties and a Method for the Production Thereof 128

Method for Cleaning of with Body Fluid-contaminated Medical Implantants and Devices with the Use of Atomic Oxygen 130

Photocatalytic Reactor 131

Method for Electrocaloric Energy Conversion 137

Thermoelectric Generator Comprising a Thermoelectric Element 140

Hybrid Sol-gel Compositions and Corrosion-resistant Coatings Based upon Same 141

A Method of Manufacturing for the Environment and Human Health Acceptable Construction Material from Contaminated Soil Containing Water-soluble Heavy Metal Compounds 142

Method for Synthesis of Tetragonal Zirconia Thin Films Suitable for Catalytic Devices 144

2013 Method of Manufacturing Fully Dense Nd-Fe-B Magnets with Enhanced Coercivity and Gradient Microstructure 146

Method for Adjusting the Friction Coefficient of Polyvinylidene Fluoride (PVDF) 147

2012 Passive Magnetic Cradle with the Mechanism of Stopping and Positioning 149

Functionalized Hydroxyapatite/ Gold Composites as “Green” Materials with Antibacterial Activity and The Process for Preparing and Use Thereof 150

Pressure Sensor with Console Ceramic Sensor Structure 152

A Process for The Synthesis of 4d and 5d (Nb, Mo, Ta, W) Nitrides of Transition Metals in Form of Quasi-One-Dimensional Structures 154

Multilayer Ceramic Structure for Contactless Dielectrical Fluids Heating 155

2011 The Manufacturing Process of Voids in the Ceramic Multi Layered Structures 157

Sintering Heat Treatment Procedure of Formpieces 158

One-Stage Process of Manufacturing Composite Ceramic Heater 159

2010 Process of Magnetic Precipitation of Yeast Biomass from Sparkling Wine 161

Method for the Preparation of Carrier Colloidal Powder with High Specific Surface Area 162

Method For The Preparation Of Carrier Colloidal Powder With Specific Surface Area 163

Process for Production of Alumina Porcelain with Improved Mechanical Properties 164

Synthesis Method for Obtaining Anatase Nanoparticles of High Specific Surface Area and Spherical Morphology 165

Improved Magnetocaloric Material and Procedure of Its Manufacture 167

Bone Implants with Multilayered Coating and Process of Their Preparation 169

Bioactive and Photocatalytic Coating on Metal Orthopaedic and Dental Implants and Procedure of Preparation 171

2009 Material in The Form of Lithium Fluoride Powder Containing Colour Centres, Method for Preparation and Use Thereof 173

Anatase Nanoparticles and Process of Synthesis for Obtaining Anatase Nanoparticles 175

Rutile Nanoparticles and Process of Synthesis for Obtaining Rutile Nanoparticles 176

Photocatalytic Deposits of TiO2 on Superparamagnetic Carriers and Procedure of Their Manufacture 178

Amorphous Multicomponent Dielectric Based on the Mixture of High Band Gap and High K Materials, Respective Devices and Manufacture 179

Alumina Porcelain with Improved Thermal Properties and Procedure of Its Manufacture 183

2008 Procedure of Preparation of Ceramics Based on Alkali Niobates and Alkali Niobate Tantalates by Mechanochemical Activation 185

A Process for the Synthesis of Nanotubes and Fullerene-Like Nanostructures of Transition Metals Dichalcogenides, Quasi One-Dimensional Structures of Transition Metals and Oxides of Transition Metals 186

2007 Procedure for Synthesis of Nanowires of Tungsten Oxide W5O14 189

Procedure of Synthesis of Nanotubes and Fullerene-Similar Nanostructures of Dichalcogenides 192

Procedure for Synthesis of Quasi One-Dimensional Structures of Dichalcogenides and Transition Metal Oxides 193

Procedure of Application of Adhesive Coating to Substrate 194

Procedure of Preparation of Magnetic Nanocomposites with High Content of Nanoparticles Dispersed in Polymer Matrix 196

Alumina Porcelain for Electrical Engineering and Procedure of Its Manufacture 198

2006 Ceramic Material, Sintered Ceramic and Component Made Therefrom, Production Method and Use of the Ceramic 199

Process of Hydprophobization of Ceramic Powder by Application of Organic Coating in Water Suspension 202

Procedure for Manufacture of Dense Ceramics Based on Niobates and Niobates-Tantalates of Alkaline Elements 204

Thick Layer Structures of Lead Perovskites on Reactive Ceramics and Their Manufacturing Process 205

2005 Method and Device for Local Functionalization of Polymer Materials 206

Thick-Layer Piezo-Resistive Pressure Sensor with Freestanding Diaphragm 208

Ceramic Ferrite Based Materials for the Absorption of Electromagneticwaves Within the Frequency Range Between 100 MHz and 12 GHz 210

Foil Absorber of Electromagnetic Ripple in The Frequency Range of Up to 12 GHz 211

2004 Procedure for Production of Complex Lead Perovskites 213

Procedure for Production of High-Density KNN (K0.5Na0.5NbO3) Ceramics 214

Hybrid Surface-Mount Thick-Film Module for the Protection of Telecommunication Lines 215

Small Ceramic Piston for Hydraulic Brakes 216

2003 Quasi-One-Dimensional Polymers Based on the Metal-Chalcogen-Halogen System 218

Procedure of Preparation of Complex Perovskites by Mechanochemical Synthesis 221

Ferroelectric Thick-layer Structures on Reactive Ceramic 222

Low Sinterable Ferroelectric Ceramics Based on Li2O Doped (Ba, Sr) TiO3 223

Permeameter for Measuring Magnetic Properties at High Temperatures 224

Electrical Component Used as a Capacitor or Varistor Comprises a Base Body Made from a Ceramic Material, and an Electrically Conducting Contact Layer for Contacting the Component and Arranged on the Surface of the Base Body 229

2002 Procedure and Device for Solidification Control of Ceramic Water Suspensions in Closed Moulds 231

Suspensions of Powders for Plastic Forming at Room Temperature and Processes of Forming This Suspension 232

Composition and Preparation of Water Suspensions for Producing of Multilayered Varistors 234

Ferroelectric Thick-Layer Structures on Silicon 235

Material Based On Single-Layer Nanotube Bundles of Transient Metals Dichalcogenides and Electronic Conductor for the Use in Lithium Batteries and Accumulators 236

Use of Quasi-one-dimensional Ternary Compounds of Transition Metals and Quasionedimensional Compounds of Transition Metal Chalcogenides as Electron Emitters 238

2001 Procedure of Preparation of Ferrite Ceramics by Hydrothermal Reaction Between Oxides and Carbonates 242

Method for Protection of AlN Powder Against Decomposition in Humid Atmosphere or Water Medium 243

2000 Process of Synthesis of Nanotubes of Transition Metals Dichalcogenides 244

Power Manganite Zinc Ferrites for Frequency Ranges Between 300 kHz and 1.5 MHz 247

Capacitor Comprises Two Or More Electrode Layers Lying Opposite Each Other with Dielectric Layers Made of a Ceramic Material Containing Different Components Between Them 248

Ceramic Material Used in the Electrical Industry e.g. For Producing Dielectric Resonators Contains Two Different Components Having a Perovskite Structure Containing Silver on the A Sites and Niobium and Tantalum on the B Sites 249

Microwave Component Comprising a Silver Niobium Tantalate Containing Dielectric Ceramic Base 253

Production of a Ceramic Body Comprises Forming Particles of a Sort A and a Sort B, forming a Particle Mixture by Mixing the Different Sorts of Particles, producing a Blank by Pressing the Particle Mixture, and Sintering 256

Biological Sciences 260

2017 Method of Treating Garlic Cloves 260

2016 Flow Device 262

Remediation Apparatus and Procedure for Remediation of Water from Small Biological Wastewater Treatment Plants 263

2015 The Impregnation Process and Attachment of Microorganisms in Porous Materials 266

Extract from the Wood of Trees of the Genus Fir to Prevent, Alleviate or Treat Unwanted Skin Changes and Preparations 268

Peptides for Pharmacological Intervention in Ghrelin System 269

Mixture of Natural Polyphenols from White Fir Wood for Reducing Postprandial Glucose Concentration 271

Process for Regulation of Lactic Acid Fermentation in Wine Production by Magnetic Elimination of Bacteria 272

Crystal Structure of Staphylococcus Aureus Autolysin E, Method of Producing the Crystal and Its Use in Screening Methods 273

2014 Predicting Genetically Stable Recombinant Protein Production in Early Cell Line Development 276

Predicting Productivity in Early Cell Line Development 279

Co-Cultivation of Propionibacterium and Yeast 280

2013 Stable Pantetheine Derivatives for the Treatment of Pantothenate Kinase Associated Neurodegeneration (PKAN) And Methods for The Synthesis of Such Compounds 289

Composition and Method for Plant Protection 295

Caspase-1 Imaging Probes 296

Anti-Jagged 1/Jagged 2 Cross-Reactive Antibodies, Activatable Anti-Jagged Antibodies and Methods of Use Thereof 298

Low-Dimensional Structures of Organic and /or Inorganic Substances and Use Thereof 307

2012 Chemical Hybridization of Hermaphrodite Plant Species with Easily Soluble Derivatives of Oxanilic Acid 312

Oxide Ferrimagnetics with Spinel Structure Nanoparticles and Iron Oxide Nanoparticles, Biocompatible Aqueous Colloidal Systems Comprising Nanoparticles, Ferriliposomes, and Uses Thereof 313

Coverslip Processor for Staining of Specimens on Coverslips and Method for Staining of Specimens on Coverslips 317

Activatable Antibodies That Bind Epidermal Growth Factor Receptor and Methods of Use Thereof 319

2011 Complex Antioxidant Extract from the Bark of Fir Tree with Cyclodextrins 329

A Complex Mixture of Natural Fibers with Added Selenium and Magnesium for the Maintenance of Body Weight, Organism Metabolism and Activation of the Immune System 331

Refined Liquid Antioxidant Extract from the Bark of Fir Tree and Process for Its Production 332

Use of Macrocipines as Pesticidal Agents 333

Contrast Agent for T_1 and/or T_2 Magnetic Resonant Scanning and Method for Preparing It 335

Cathepsin-Binding Compounds Bound to a Nanodevice and Their Diagnostic and Therapeutic Use 337

Modified Food Grade Microorganism for Treatment of Inflammatory Bowel Disease 340

2010 A Process for the Preparation of Marbofloxacin and Intermediate Thereof 342

Use of Glycosidases and Glycosyltransferases for Increased Production of Proteins 345

5-Nitro-8-Hydroxyquinolines as Inhibitors of Cathepsin B 346

2008 Inhibition of Activity of Cathepsin X for Treatment of Diseases Connected with Neurodegenerative Processes 348

Peptide Uroaktivin as Activator of Enzyme Urokinase 349

Antioxidative Extract from Fir and Spruce Bark 351

2007 Process for Preparing 2-Sulfinyl-1H-Benzimidazoles 353

Selective Modulators of Alpha5beta1 Integrine Receptors and Triple Modulators of Alphavbeta3, Alphavbeta5 and Alpha5beta1 Integrine Receptors with 1,3,5-Tri 355

Double and Triple Modulators of Alphavbeta3, Alphallbbeta3, Alphavbeta5 and Alpha5beta1 Integrine Receptors with 1,2,4-Oxadiazoleskeleton 356

Double and Triple Modulators of Alphavbeta3, Alphallbbeta3, Alphavbeta5 and Alpha5beta1 Integrine Receptors with 3-Phenyl-1,2,4-Oxadiazole Skeleton 357

Mild Chemically Cleavable Linker System 358

Ultrasound Elution of Biological Ligands 359

Procedure of Synthesis of Amidines and Their Derivatives 361

2006 Diazenedicarboxamides as Inhibitors of D-Alanyl-D-Alanin Ligase 362

New Arylsulphonohydrazide MurC and MurD Enzyme Inhibitors 363

2005 Procedure for the Desulphurisation of Exhaust Gases with Integrated Equipment 365

Process for Preparing Clopidrogel Hydrogen Sulfate of Form I 366

2003 Procedure of Synthesis of Amidines and Their Derivatives On Solid Supports and Its Application for Preparation of Combinatoric Libraries 368

Procedure for Evaluation of Fraction of Hybrid Cells and Cell Products by Means of Confocal Microscopy and Autoclavable Electrofusion Chamber 369

Antithrombotic Active Ingredients with Dual Mechanism of Action Basedon 3,4-Dihydro-2H-1,4-Benzoxazine Skeleton 371

2002 Method for Preparation of Nanoparticles 373

2001 Process and Facility for Decrease of Organic Substances and Carbon Content in Firing Residues of Solid Fuels and in Combustion and Co-Combustion Residues of Waste 376

Purified Proenzyme of Dipeptidyl Peptidase I (Pro-DPPI) 377

Monoclonal Antibody Neutralizing Cathepsin B Activity and Its Applications 379

Physical Sciences 384

2018 Memory Device and Method for Its Operation 384

Heater for Lab-on-a-Chip 386

2017 Procedure for Synthesis of Metal Molybdates and Wolframates from Molybdenum and Wolfram Carbides and Nitrides 389

Image Enhancement System for Bone Disease Evaluation 390

Device and Method for the Location and Identification of a Radiation Source 391

Device and Method for Locating a Radiation Emitting Source Via Angular Dependence Using a Single Detection Crystal 393

Radiation Area Monitor Device and Method 394

2016 Two Mode Electro-Optic Filter 396

2015 Device and Method for Producing UV Radiation 400

Cleaning System and Method for Operating the Cleaning System 402

Polymer Dispersed Liquid Crystal Elastomers (PDLCE) 404

2014 Method and Device for Impinging Mineral Melt Stream Manipulation 409

Process and a Device for Improvement of Operation of Silicon Photomultipliers in The Regime of Piled-Up Pulses of Light 410

A Method of Colouring Titanium or Titanium Alloy 412

Angle-sensitive Gamma Camera with a Rotary Obstruction 413

Method for Improving the Comparative Tracking Index of Polymer Composites 415

Switchable Macroscopic Quantum State Devices and Methods for Their Operation 417

Method and Device for Detection and Measuring the Density of Neutral Atoms of Hydrogen, Oxygen or Nitrogen 418

Method and Apparatus for the Analysis of Materials 420

A Method and a Device for Indirect Characterization of the Damage to the Pool for Spent Nuclear Fuel 424

Micro/Nano Region Liquid Crystal Alignment Method and System Thereof Based On Laser Direct Writing 425

Method and Apparatus for Assessing the State of a Spent-fuel Facility 429

2013 The Device for Determination of Depth of the Photon Intrusion into the Scintillation Material 431

The Device for Measuring the Incident Direction of the Gamma Rays 432

System and Method for Gradient Assisted Non-Connected Automatic Region (GANAR) Analysis 433

A Laser System for the Treatment of Body Tissue 434

System and Method for Evaluation of Disease Burden 437

Method for Lightening or Eradicating Pigments in Human Skin 438

Method for Treatment of a Vascular Graft 439

2012 Ultrafast Quench Based Non-volatile Bistable Device 441

Method for Automatic Performance Diagnosis of a Photometric Particle Analyser 443

2011 Procedure of Analog and Digital Signal Processing and Their Information Which Is Contained in the Pulses and the Device for Carrying Out the Procedure 445

Method for a Synthesis of Quasi One-Dimensional Structures of 4d and 5d (Nb, Mo Ta, W) Transition Metals 446

Device for High-Frequency Excitation of Gas Plasma 448

Method for Dynamically Controlling the Density Neutral Atoms with an Active Element in a Plasma Vacuum Chamber and a Device for Treatment of Solid Materials by Using the Present Method 451

2010 Method for Quantum Distribution of the Short-Range Key 453

Hard Protective Coatings with the Possibility of Changing their Colour 454

Spherical Liquid Crystal Laser 455

An Array Smell Sensor Based on the Measurement of the Junction Resistance of Nanowires with Different Metals 460

Laser System for Treatment of Body Tissue 461

2009 Method for Synthesis of Magnetic Liposomes in Electric Field 464

Method of Treatment of Biomedical Polymeric Prostheses for Improvement of Their Antithrombogenous Properties 465

Method and Device for Instantaneous Determination of Moisture in Wood 467

Method for Storing Digital Information and Storage Element 468

2008 Method and Capacitance Sensor for Counting Aerosol Nanoparticles 471

Manually Guided Articulated Arm 472

Method for Operating a Laser System and Laser System for Cosmetically Bleaching Teeth 474

2007 Laser System 476

Polarisation Amplified Two-Channel NQR/NMR (PA NQR/NMR) Detection of Solid and Liquid Explosives by Using Multi-Pulse Series 478

Metamaterials and Resonant Materials Based on Liquid Crystal Dispersions of Colloidal Particles and Nanoparticles 482

Metamaterials and Resonance Materials Based On Composites of Liquid Crystal Colloids and Nano Particles 484

Method and Device for Modification of Implants and Artificial Veins Made of PET Polymer 485

Polyester Biomaterial with Surface Having Antithrombotic Properties and Procedure of Its Manufacture 486

Laser System for Medical and Cosmetic Applications 488

2006 Multistable Liquid Crystal Device 490

Field Microscope for The Examination of Emission Areas on the Surface of Cold Flat Cathodes 491

Method and Device for Selective Etching of Composite Materials with Laser Ablation 493

Device for Measurement of Flow Rate or Speed of Fluids or Gasses with Several Windows 494

Field Microscope for the Examination of Emission Areas on the Surfaceof Cold Flat Cathodes 496

2005 Device and Procedure of Flow Detection in Metal Capillary Tubes 498

Liquid Crystal Switchable Light Filter With Adjustable Contrast and Wide Visual Angle 499

Small Field Intensity Modulated Radiation Therapy Machine 501

2004 Triple Resonance Enhanced Nuclear Quadropole Resonance Detection of TNT and Other Explosives 504

Illumination of the Electromagnetic Display Panels 505

Electromagnetic Display Panel 507

Method for Improving the Electrical Connection Properties of the Surface of a Product Made from a Polymer-Matrix Composite 510

Procedure and Device for Measuring Ultrahigh Vacuum 515

2003 High Contrast, Wide Viewing Angle LCD Light-Switching Element 518

Plasma Treatment for Purifying Copper or Nickel 520

Process for Treating a Polymer Matrix Composite Comprises Subjecting the Composite to a Large Flow of Oxygen Radicals, Removing the Surface Polymers, Increasing the Surface Roughness, and Activating the Composite 524

2001 Procedure and Device for Determination of Specific Surface of Granulates 526

Polarization-Amplified 14N Nuclear Quadrupole Resonance Detection of TNT and Other Explosive Materials in Mines by Using Quadrupole-Quadrupole "Solid" Effect 527

Integrated Position Resolver for Hybrid Synchronous Power Drives 529

Hybrid Synchronous Electric Machine 531

Optical Catalytical Probe for Measuring Atom Concentrations of Oxygen, Nitrogen and Hydrogen in Gas or Plasma 534

2000 Polarisation Type Amplified 14N Nuclear Quadruple Resonance Detection of TNT and Other Explosives in Landmines 536

Magnetic System for Polarisation Amplified NQR Land Mine Detector 537

Cofocal Holographic Optical Memory Without Record Overlapping 539

Synchronous Hybrid Electric Machine with Toroid Coil 541

Process of Synthesis of Dichalkogenide Compounds of Transition Metals with Built-In Fullerenes 544

1999 Process for Production of Compensational Polymeric Layer for LCD Optical Switches and Construction of Such a Switch 546

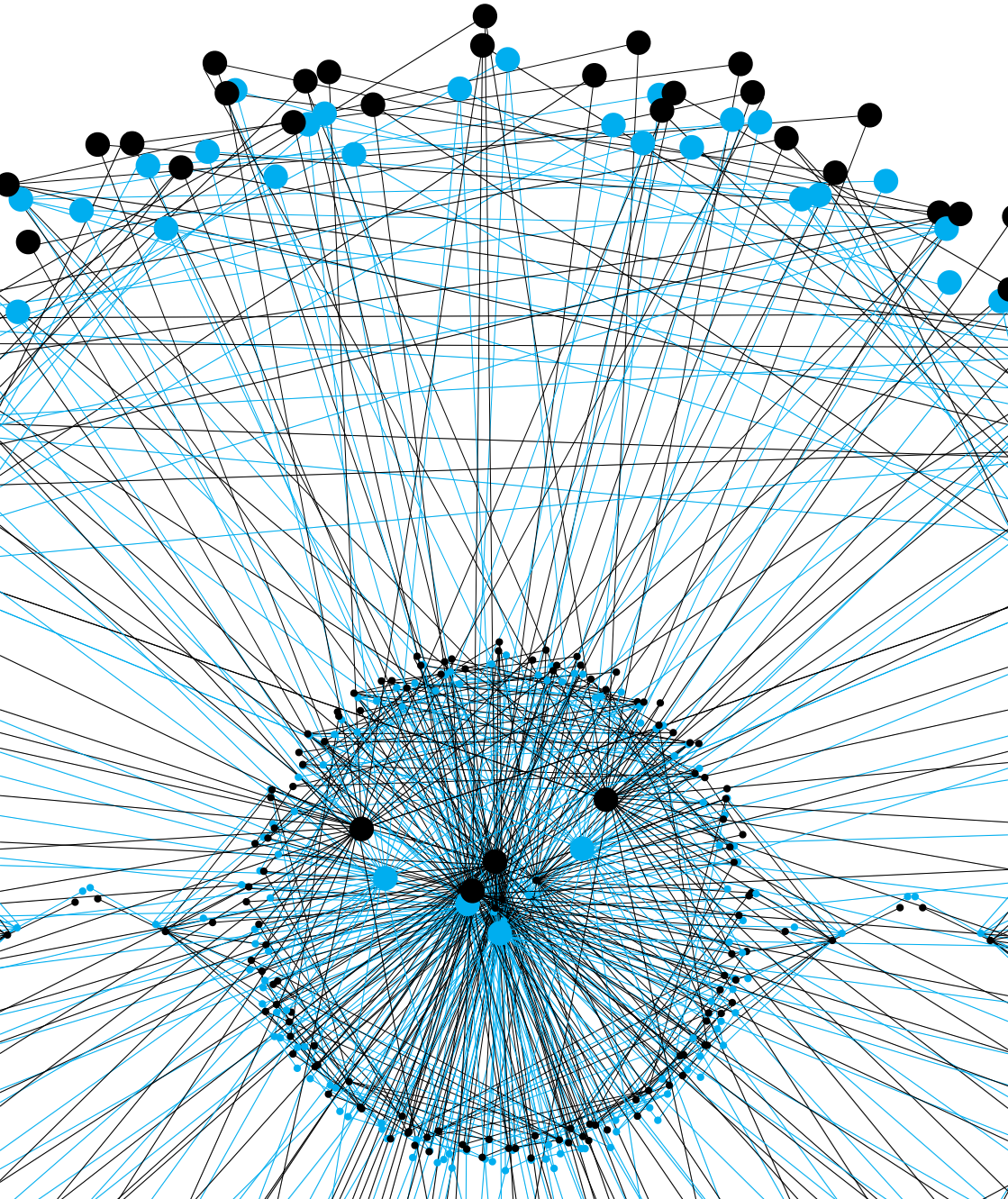

Jožef Stefan Institute (JSI)

The Jožef Stefan Institute is the leading Slovenian scientific research institute, covering a broad spectrum of basic and applied research. The staff of more than 1000 specializes in natural sciences, life sciences and engineering. The subjects concern production and control technologies, communication and computer technologies, knowledge technologies, biotechnologies, new materials, environmental technologies, nanotechnologies, and nuclear engineering.

The mission of the Jožef Stefan Institute is the accumulation - and dissemination - of knowledge at the frontiers of natural science and technology to the benefit of society at large through the pursuit of education, learning, research, and development of high technology at the highest international levels of excellence.

In order to increase the flow of knowledge and technology into the domestic and foreign economies and to promote the Jožef Stefan Institute as a Centre of excellence for technological progress for all segments of society an internal Center for Technology Transfer and Innovation (CTT) has been established.

Center for Technology Transfer and Innovation (CTT)

The primary task of CTT is to enable and facilitate the transfer of new technologies and innovations, developed at the Institute and its Departments, to the industry.

CTT has acted as a financially independent unit within the Institute since January 2011. The Center's success is currently based on the work of thirteen experts, six of which are educated in natural sciences and engineering (3 PhDs, 3 MSc), six in economics and one in social sciences, while one of the experts is also qualified as a patent attorney, two hold a Master of Business Administration degree (MBA) and one a Latin Legum Master (LLM). We are members of the ASTP (Association of Science and Technology Professionals), the LES (Licensing Executives Professionals) and three team members hold the U. S. "Certified Licensing Professional" certificate. We are coordinators of the Consortium for technology transfer from public research organisations into industry (KTT). Members of the consortium are eight major Slovenian public research organizations – Jožef Stefan Institute, National Institute of

Chemistry, National Institute of Biology, University of Ljubljana, University of Maribor, the Agricultural Institute of Slovenia, Faculty of Information Studies Novo mesto and the University of Primorska. We are also coordinating the Enterprise Europe Network in Slovenia.

Our key activities encompass:

(1) technology testing facilities, reference experimentation facilities and technology consulting services;
(2) initiating new industrial cooperation: the search for industrial partners, including creating market analyses and support for contracting;
(3) establishing of new spin-off / spin-out companies, including the search for investors for licensing and the financing of spin-off / spin-out companies;
(4) marketing intellectual property, including support for negotiations and licensing contract relations establishment;
(5) supporting active integration of economy and science with internationalization;
(6) supporting the protection of intellectual property including raising awareness about it;
(7) support and assistance in applying to national and EU tenders, including provision of information on suitable Calls for application and full proposal revision, focused on the marketing, IPR, UVP and customer segment related issues;
(8) support and assistance to the competence centres (e.g. the competence centre in the domain of customized and low-energy computing);
(9) measures for the popularization of science amongst the young population: organization of visits to the Jožef Stefan Institute, mentoring for students and providing special services for young researchers employed at the Institute.

Through our activities, we complement and enrich innovative research, innovation management and knowledge transfer, as well as organization of focused meetings between researchers and industry representatives, thematic workshops, and trainings at the Institute. Our activities are driven by the desire to increase the visibility of the Institute, to raise companies' awareness of the Institute, and thereby encourage their cooperation with us. At the same time our activities are implemented with the goal to promote entrepreneurial mentality among researchers, as well as with sincere concern for the education and popularization of science among young people.

The main goal of the Center for Technology Transfer and Innovation at the Jožef Stefan Institute is to increase the flow of knowledge and technology into domestic and foreign economy and to promote the Jožef Stefan Institute as a Centre of excellence for technological progress for all segments of society.

Introductory explanations

WE HAVE PREPARED A REVIEW OF THE PATENTS DEVELOPED by the researchers from the Jožef Stefan Institute for the period 1999-2018 (priority dates within the period from January 1st 1999 till December 31st 2018). Patents are presented within a family of patents.

A patent family is a collection of patent applications covering the same or similar technical content which are usually filed in several different countries.

Based on the patents' abstracts all patents are classified within 4 different categories of technologies:
1) Electronics, IT and Telecommunications,
2) Nanotechnology and New Materials,
3) Biological Sciences and
4) Physical Sciences.

In addition based on the patents' abstracts for each patent we determined Category, Technology Application Codes and Market Application Codes which are EEN Technology and Market keywords.
All information presented on the website was obtained from publicly available sources (e.g. Ipsum, Espacenet, UIL SIPO, etc.).

Patents filled at the Slovenian Intellectual Property Office which are available only in Slovenian language were translated with the Patent Translate – a service provided by European Patent Office (EPO) and Google.

In some cases, inventors, applicants or even the titles changed when the Extended patent application was filled. The accuracy of the dates is defined by the dates for basic and extended patent application.

Editors

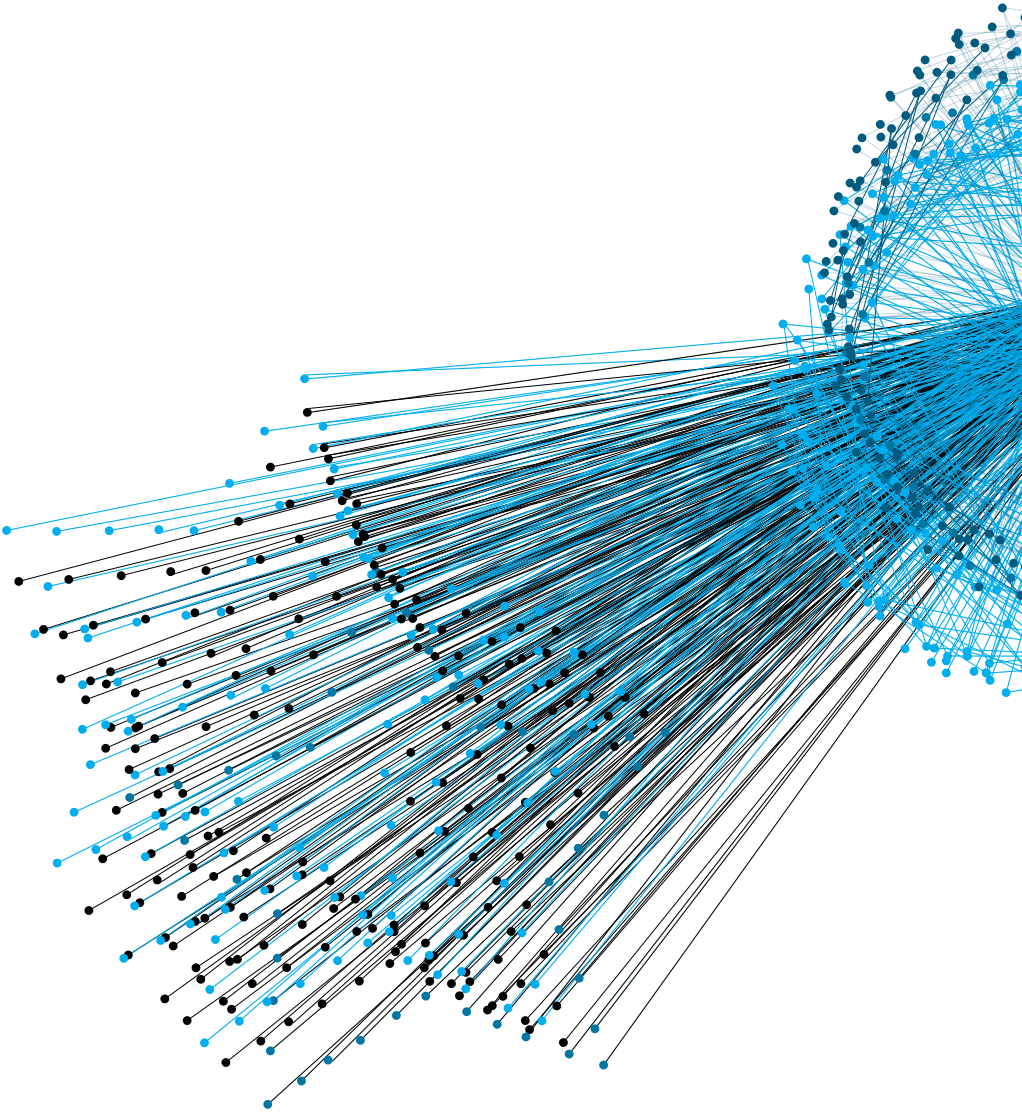

Patents from the Jožef Stefan Institute
1999-2018

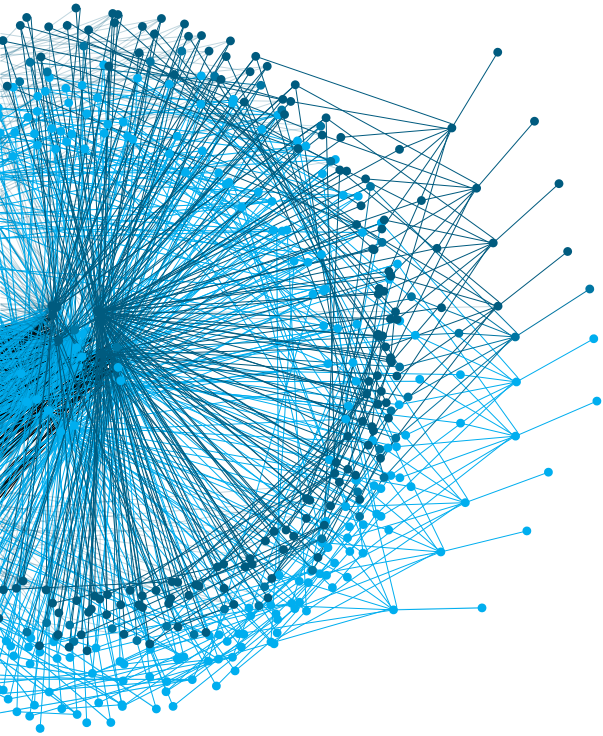

Key

- Publication Number
- Application Date
- Assignee/Applicant
- Inventor
- Title
- Description
- Drawing(s)
- Category
- Technology Aapplication Codes
- Market Application Codes
- URL
- Patent Office(s)

Electronics, IT and Telecommunications

2018

A Smart Home Control System Using Artificial Intelligence

SI25667A

31. 5. 2018

Elgoline d. o. o. [SI]

Jože Dermol, Matjaž Gams, Igor Gornik, Danijel Jankovec, Tomaž Kompara, Rene Markovič, Miha Mlakar, Peter Virtič

Sistem za krmiljenje pametnega doma z uporabo umetne inteligence [SL], A Smart Home Control System Using Artificial Intelligence [EN]

The present invention relates to a smart home control system using artificial intelligence, comprising sensors and actuators arranged in the area of the smart home to be controlled. Based on the collected sensor data, the intelligent control system automatically generates smart home control rules based on which the actuators are controlled. According to the invention, it is proposed that the system comprises at least one sensor (2) and at least one actuator (1), which are data-connected to the intelligent control system (3). The latter comprises a module with validated rules (4), a database (5), a module for machine learning (6) and a module with a set of non-validated rules (7). The control system (3) is optionally equipped with a module for manual control of the rules (8), which are data-related to each other.

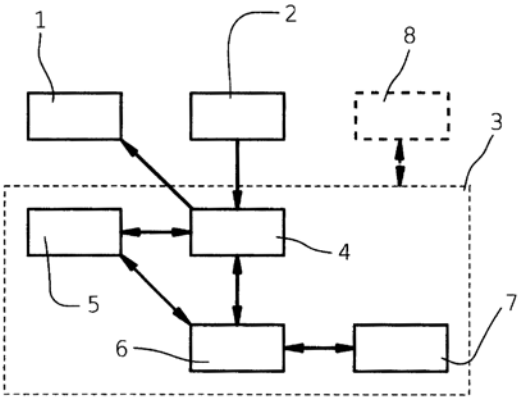

Electronics, IT and Telecommunications

Electronics, IT and telecoms

Computer related

https://worldwide.espacenet.com/patent/search/family/069022436/publication/SI25667A?q=SI25667

UIL RS

Method and System for Model Integration in Ensemble Learning

US2019303795A1

29. 3. 2018

NEC Laboratories Europe GmbH [DE]

Sašo Džeroski, Jihed Khiari, Luis Moreira-Matias, Bernard Ženko

Method and System for Model Integration in Ensemble Learning

The present invention refers to a method for ensemble machine learning including: receiving input data and input models, the input models each having learning properties; generating perturbed data by adding noise to the input data; performing a landmarking operation on the perturbed data to generate meta-features that correlate with the learning properties of the input models; generating decision trees based on the input models and the meta-features.

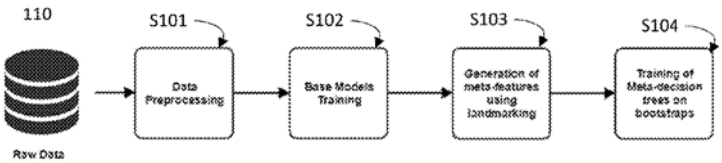

Electronics, IT and Telecommunications

Electronics, IT and telecoms, Other industrial technologies

Communications, Computer related, Other electronics related

https://worldwide.espacenet.com/patent/search/family/068056411/publication/US2019303795A1?q=jihed%20khiari%20bernard

US

2017

System and Procedure for Managing the Electrical Power of the Cooling System by Regulating the Product Temperature and Air Temperature

SI25557A

15. 11. 2017

Jožef Stefan Institute [SI], Entia, razvoj informacijskih tehnologij d. o. o. [SI], University of Ljubljana [SI]

Miha Glavan, Dejan Gradišar, Iztok Humar, Satja Lumbar, Mark Umberger, Damir Vrančić

Sistem in postopek za upravljanje električne moči hladilnega sistema z reguliranjem temperature izdelkov in temperature zraka [SL], System and Procedure for Managing the Electrical Power of the Cooling System by Regulating the Product Temperature and Air Temperature [EN]

The subject of the invention is a system and method for automatic power control of one or more cooling systems. Each of the refrigeration systems contains one or more compressors, condensers and refrigeration elements. The invention enables short-term management of the consumption of cooling systems, where it is possible to increase or decrease the current electricity consumption by giving the desired reference value. The system consists of three control circuits connected in a cascade and implemented by: (i) a central power management controller, (ii) a local product temperature controller and (iii) a local air temperature controller, and a system to protect against integral escape.

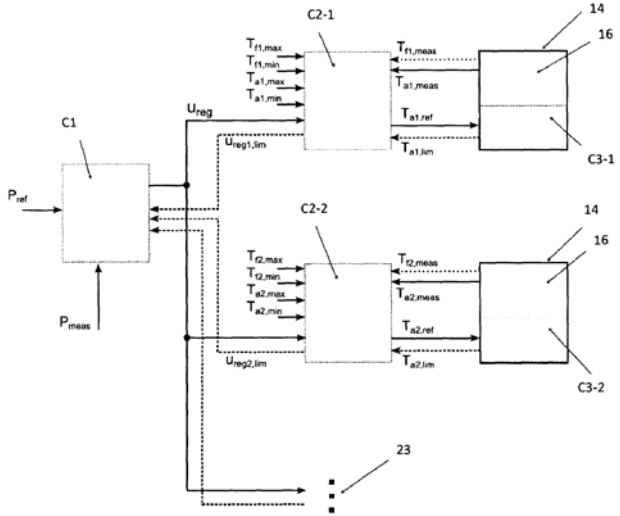

Electronics, IT and Telecommunications

Electronics, IT and telecoms, Industrial manufacturing, material and transport

Industrial products

https://worldwide.espacenet.com/patent/search/family/066635603/publication/SI25557A?q=si25557

UIL RS

Cardan Joint

WO2018197439A1

25. 4. 2017

Jožef Stefan Institute [SI], Igor Kovač [SI]

Igor Kovač

Cardan Joint

The present invention refers to a cardan joint and a multi-axis positioning containing the same. The cardan joint comprising: a first yoke; and a second yoke. Wherein the first yoke and the second yoke are connected via a linkage. The cardan joint further comprising: a backlash adjusting mechanism, the backlash adjusting mechanism configured to reduce or increase an amount of backlash between the linkage and either the first yoke or the second yoke.

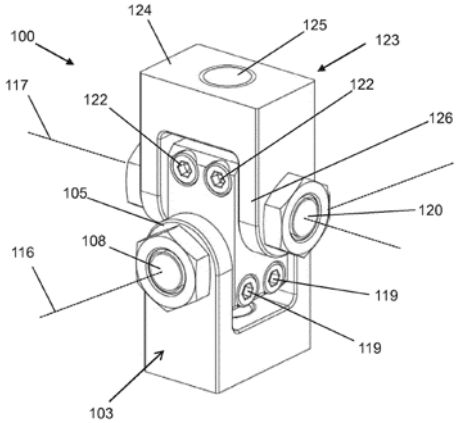

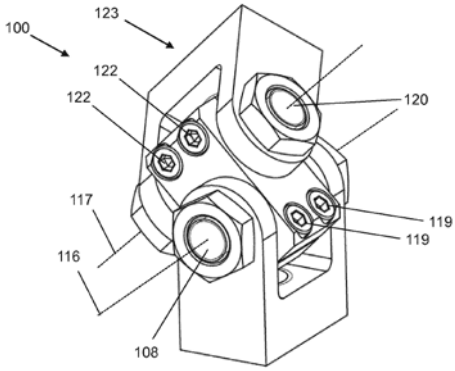

Electronics, IT and Telecommunications

Industrial manufacturing, material and transport

Industrial products

https://worldwide.espacenet.com/patent/search/family/058795657/publication/WO2018197439A1?q=WO2018197439A1

WIPO

Extended patent application

EP3615823A1

23. 4. 2018

Jožef Stefan Institute [SI], Igor Kovač [SI]

Igor Kovač

Cardan Joint

https://worldwide.espacenet.com/patent/search/family/058795657/publication/EP3615823A1?q=pn%3DEP3615823A1

2014

Search Device for RDF Data and Search Method for RDF Data

JP2016009337A

24. 6. 2014

Yahoo Japan Corp [JP]

Iztok Savnik, Nitta Kiyoshi

Search Device for RDF Data and Search Method for RDF Data

This disclosure provides a technology capable of relatively quickly acquiring a search result even in the case of searching large amounts of RDF data. A plurality of query node parts N03 acquire RDF data corresponding to a graph pattern allocated to a query node part N03 from a database. Then, the query node part N03 transmits the acquired RDF data to a join node part N02 at its parent position. The join node part N02 connects the RDF data transmitted from a query node part N04 being the child of the join node part N02.

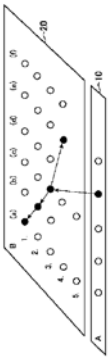

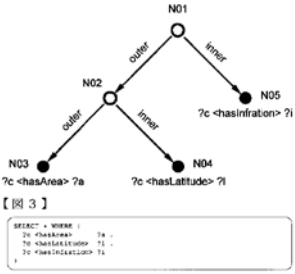

Electronics, IT and Telecommunications

Electronics, IT and telecoms

Communications

https://worldwide.espacenet.com/patent/search/family/055226851/publication/JP2016009337A?q=JP2016009337A

JP

Method and System for Detecting a Person Driving a Vehicle while Using a Mobile Computing Device

GB1413666A

1. 8. 2014

Jožef Stefan Institute [SI]

Matjaž Gams, Hristian Gjoreski, Mitja Luštrek

Method and System for Detecting a Person Driving a Vehicle while Using a Mobile Computing Device

The subject of the invention is a method and system for detecting a person driving a vehicle while using a mobile computing device. First and second movement patterns are detected by means of the mobile computing device, said first movement pattern being attributable to a movement of a vehicle and said second movement pattern being attributable to a person using the mobile computing device. A relation is established between said first movement pattern and said second movement pattern, and based on said relation it is determined whether said person is driving said vehicle while using said mobile computing device. Detecting said first movement pattern and/or second movement pattern may comprise a step of detecting a linear and/or gravitational acceleration by means of an acceleration sensor unit. The first and second movement patterns can be any type of movement or motion detected by the mobile computing device, such as a single isolated movement or a sequence of movements that may be characteristic of a driving scenario or a person using the mobile phone while driving.

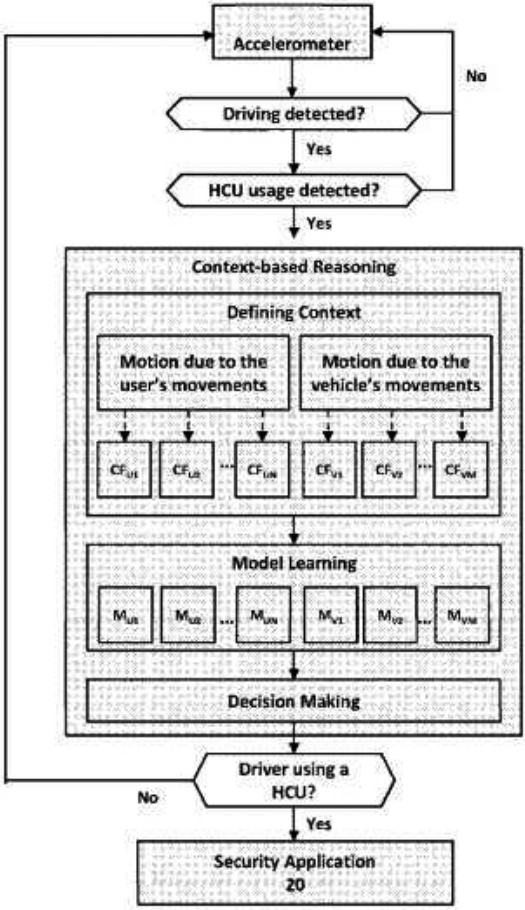

Electronics, IT and Telecommunications

Electronics, IT and telecoms

Communications, Computer related, Consumer related

https://worldwide.espacenet.com/publicationDetails/biblio?FT=D&date=20160210&DB=EPODOC&locale=en_ES&CC=GB&NR=2528877A&KC=A&ND=4

GB

Extended patent application

SI24796A

16. 10. 2014

Jožef Stefan Institute [SI]

Matjaž Gams, Hristian Gjoreski, Mitja Luštrek

Metoda in sistem za zaznavo osebe, ki vozi vozilo in hkrati uporablja prenosno računalniško napravo [SL], Method and System for Detecting a Person Driving a Vehicle while Using a Mobile Computing Device [EN]

https://worldwide.espacenet.com/publicationDetails/originalDocument?FT=D&date=20160229&DB=EPODOC&locale=en_ES&CC=SI&NR=24796A&KC=A&ND=5

https://worldwide.espacenet.com/publicationDetails/originalDocument?FT=D&date=20160229&DB=EPODOC&locale=en_ES&CC=SI&NR=24796A&KC=A&ND=5

Method and System for Context-based Activity Recognition

SI24356A

01. 8. 2014

Jožef Stefan Institute [SI]

Matjaž Gams, Hristijan Gjoreski, Mitja Luštrek, Boštjan Kaluža

Metoda in sistem za prepoznavanje aktivnosti na podlagi konteksta [SL], Method and System for Context-based Activity Recognition [EN]

The present invention relates to improved methods for identifying daily activities of a person. It includes a new method for identifying activities that uses the context of the current activity to determine and improve the accuracy of its recognition. The method uses sampled data on linear and gravitational acceleration. This information is provided by a motion sensor, directly or indirectly supported by the subject. The context extractor processor calculates multiple contexts from the data. The processor for context modeling is a machine learning memory that teaches the model for each value of the context. The activity of the subject is recognized by combining, t. j. pooling the results of several context models. The invention

provides an application for identifying an activity that determines the activity of the subject. An application may include a notification mechanism with an alarm if a drop is detected. Among other things, it can include: a gym application, an activity-based daily application, an out-of-home help application, etc. The technical effect of the experience allows you to control the smart home and more precisely detect the fall that triggers an automatic emergency call.

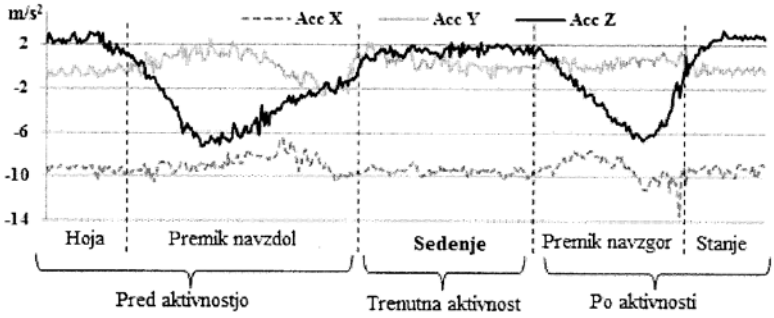

Electronics, IT and Telecommunications

Electronics, IT and telecoms

Communications, Computer related, Other electronics related

https://worldwide.espacenet.com/publicationDetails/biblio?FT=D&date=20141128&DB=&locale=en_EP&CC=SI&NR=24356A&KC=A&ND=4

UIL RS

Device and Method for Acquisition and Transfer of Signals

GB1407135.1

23. 4. 2014

Jožef Stefan Institute [SI]

Gregor Papa, Barbara Koroušić Seljak, Marko Pavlin

Device and Method for Acquisition and Transfer of Signals

The subject of the invention is an adapter device and method for acquisition and transfer of signals from a host device 11 that has no built-in exter-

nal communication capability, i.e. no communication ports. In one embodiment the adapter device 10 includes an acquisition module 1 configured to acquire data signals from the host device; and a transfer module 5, which is communicably connected to the acquisition module, configured to transfer said acquired data signals to an external device 12. The adapter device may include a processor 4 and voltage level shifter 3. The adapter device may be connected in the signalling path of an LCD display in the host device so that it can sniff, interpret (if necessary) and transmit the data being sent by the host device to its LCD screen to an external device. The embodiment described is the modification of a weighing/kitchen scale, with no in-built means of communicating externally, so that an adapter device is connected internally to its LCD screen circuitry such that the adapter device can sniff and send out measurements taken by the scale to an external device, such as a connected smart-phone. The adapter may communicate G using a wired connection or wirelessly, e.g. Bluetooth, to the external device. An wireless adapter/retro-fit kit is also described..

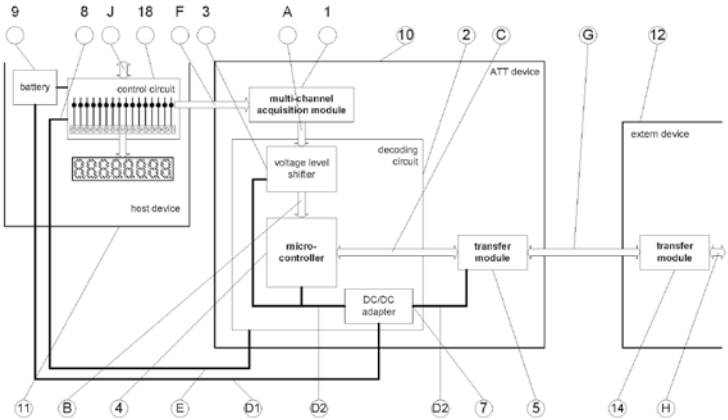

Electronics, IT and Telecommunications

Electronics, IT and telecoms, Measurements and standards

Other electronics related, Communications

https://www.ipo.gov.uk/p-ipsum/Case/ApplicationNumber/GB1407135.1

GB

Extended patent application

SI24792A

16. 10. 2014

Jožef Stefan Institute [SI]

Gregor Papa, Barbara Koroušić Seljak, Marko Pavlin

Naprava in postopek za zajem in prenos signalov

https://worldwide.espacenet.com/publicationDetails/originalDocument?FT=D&date=20160229&DB=EPODOC&locale=en_ES&CC=SI&NR=24792A&KC=A&ND=5

2013

Process of Identifying the Person Who Enters into the Space

SI24485A

19. 9. 2013

INTECH-LES, development center, d. o. o. [SI]

Matjaž Gams, Hristijan Gjoreski, Igor Gornik, Aleš Moljk, Rok Piltaver, Janez Polje, Mitja Virant

Postopek identifikacije osebe, ki vstopa v prostor [SL], Process of Identifying the Person Who Enters into the Space [EN]

The present invention relates to a method of identifying a person entering a room with limited access, i.e. and apartment and the like. According to the invention it is designed that the method includes collecting information about opening and closing access point (1) by using sensors (2, 3), which are stored in a database (4). This is followed by processing the stored information and gathering indicators about opening and closing access point (1) by using a central processing unit (5). Afterwards a model of every person entering and/or exiting through access point (1) is designed, the identity of a person, opening and/or closing access point (1) is defined, and optionally, a model with newly acquired information about a person opening and/or closing access point (1), is upgraded.

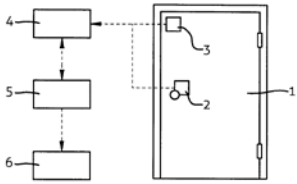

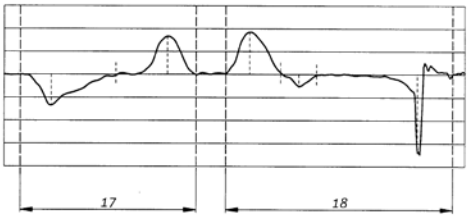

Electronics, IT and Telecommunications

Electronics, IT and telecoms

Communications, Computer related

https://worldwide.espacenet.com/patent/search/family/050486922/publication/WO2015040503A1?q=si24485

UIL RS

Extended patent application

WO2015040503A1

10. 3. 2014

INTECH-LES, development center, d. o. o. [SI]

Matjaž Gams, Hristijan Gjoreski, Igor Gornik, Aleš Moljk, Rok Piltaver, Janez Polje, Mitja Virant

Identification Method of a Person Entering a Room

https://worldwide.espacenet.com/patent/search/family/050486922/publication/WO2015040503A1?q=si24485

A Procedure and a Device for Non Invasive Control of Internal Temperature Variables in Real Time Between the Therapy with Cooling and Heating

SI24357A

8. 5. 2013

Jožef Stefan Institute [SI]

Aleksandra Rashkovska, Roman Trobec

Postopek in naprava za neinvazivno vodenje notranjih temperaturnih spremenljivk v realnem času med terapijo z ohlajanjem ali ogrevanjem [SL], A Procedure and a Device for Non Invasive Control of Internal Temperature Variables in Real Time Between the Therapy with Cooling and Heating [EN]

The invention refers to a method and device that enable control of inner body temperatures according to different therapeutic protocols. The

technical problem that the invention solves is the control of inner body temperatures (hidden temperatures) that are difficult or impossible to be measured. In that context, a predictive model is used to estimate (predict) the values of the controlled inner temperature variables based on a smaller number of other variables whose measurement is more feasible, i.e. temperatures on the body surface. However, simulations are usually resource and time consuming. The predictive model is constructed using advanced methods for data analytics to capture the correlation between the hidden variable and the measurable ones in data resulting from preliminary computer simulation of the system for different input simulation parameters.

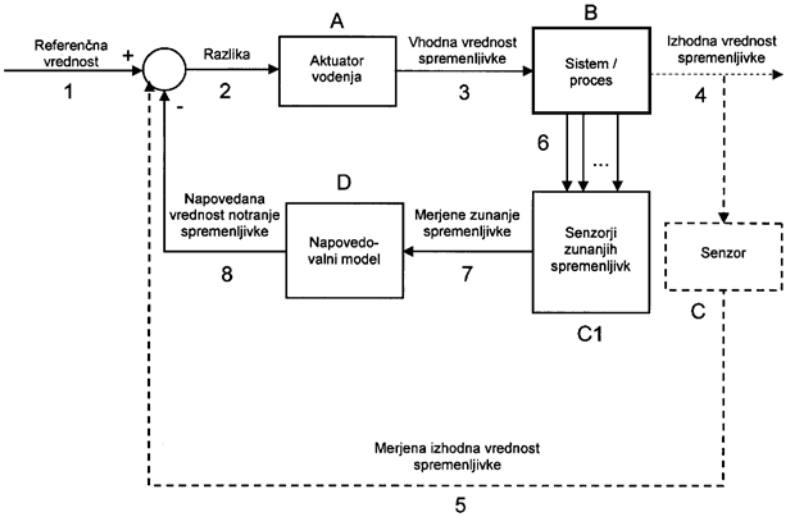

Electronics, IT and Telecommunications

Electronics, IT and telecoms, Measurements and standards

Other electronics related, Medical / health related, Consumer related

https://worldwide.espacenet.com/publicationDetails/originalDocument?FT=D&date=20141128&DB=&locale=en_EP&CC=SI&NR=24357A&KC=A&ND=4

UIL RS

Extended patent application

WO2014180941A1

8. 5. 2014

Jožef Stefan Institute [SI]

Aleksandra Rashkovska, Roman Trobec

Method and Device for Non-invasive Real-time Control of Inner Body Temperature Variables During Therapeutic Cooling or Heating

https://worldwide.espacenet.com/publicationDetails/biblio?FT=D&date=20141113&DB=&locale=en_EP&CC=WO&NR=2014180941A1&KC=A1&ND=4

Interactive Door System

SI24326A

3. 1. 2013

INTECH-LES, development center, d. o. o. [SI]

Matjaž Gams, Igor Gornik, Tomaž Kompara, Domen Marinčič, Aleš Moljk, Rok Piltaver, Janez Poje, Mitja Virant

Interaktivni vratarski sistem [SL], Interactive Door System [EN]

The present invention refers to an interactive door system, consisting of a new intelligent interface, designed to control entering the place with a restricted entry, e.g. an apartment and the like. It is provided for, according to the present invention, that the system comprises a device, placed in the door-area of the place with the restricted entry, connected to at least one external group. Said device comprises at least one management component (2), a processing component (3) and a user interface component (4), said management component (2) manages at least one external group. Following the above description, the services similar to those performed by a human doorman are offered, moreover, safety and comfort are increased.

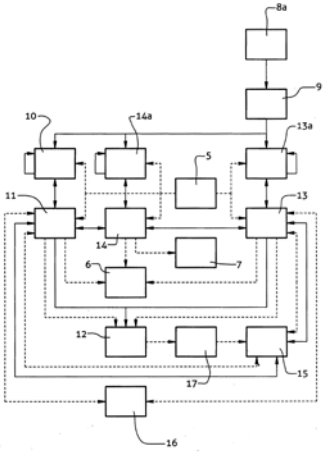

Electronics, IT and Telecommunications

Electronics, IT and telecoms

Communications, Computer related

https://worldwide.espacenet.com/patent/search/family/049304024/publication/SI24326A?q=SI24326A%20INTERACTIVE%20DOOR%20SYSTEM

UIL RS

Extended patent application

WO2014132108A1

22. 7. 2013

INTECH-LES, development center, d. o. o.

Matjaž Gams, Igor Gornik, Tomaž Kompara, Domen Marinčič; Aleš Moljk; Rok Piltaver, Janez Poje, Mitja Virant

Interactive Door System

https://worldwide.espacenet.com/patent/search/family/049304024/publication/WO2014132108A1?q=SI24326A%20INTERACTIVE%20DOOR%20SYSTEM

The Procedure of the Fast Filtration of the Signal of the Rotation Speed with the Automatic Elimination of the Periodic Offset

SI24580A

19. 12. 2013

Jožef Stefan Institute [SI]

Damir Vrančić, Marko Nerat, Samo Krančan

Postopek hitrega filtriranja signala rotacijske hitrosti s samodejnim izločanjem periodičnega odmika [SL], The Procedure of the Fast Filtration of the Signal of the Rotation Speed with the Automatic Elimination of the Periodic Offset [EN]

The subject of the invention is a process for automatic data filtering or non-delayed measurements, where the speed data contain a repeating pattern. The proposed process allows you to instantiate metrics automatically, removing the repeated sample in the measurements automatically. The proposed procedure is used to regulate the speed of the brushless one-way BLDC motors or to control or measure the speed of the rotary machines.

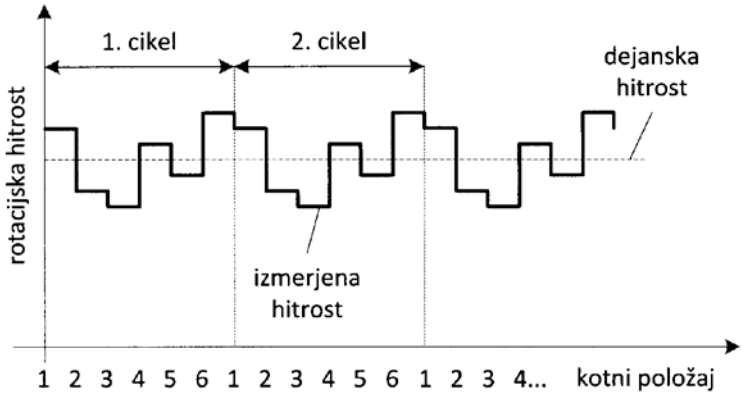

Electronics, IT and Telecommunications

Physical and exact sciences, Measurements and standards

Computer related, Other electronics related

https://worldwide.espacenet.com/publicationDetails/biblio?FT=D&date=20150630&DB=&locale=en_EP&CC=SI&NR=24580A&KC=A&ND=4

UIL RS

The Device and the Procedure for Constant Monitoring of the State of the Lubricant and Its Partical Content

SI24579A

3. 12. 2013

University of Ljubljana [SI], Jožef Stefan Institute [SI]

Jožef Vižintin, Marques Jose Miquel Querido Salgueiro, Boris Kržan, Gabrijel Peršin, Đani Juričić, Pavle Boškoski, Gregor Dolanc

Naprava in postopek za stalno spremljanje stanja maziva in vsebnosti delcev v njem [SL], The Device and the Procedure for Constant Monitoring of the State of the Lubricant and Its Partical Content [EN]

The present invention relates to a device for continuous monitoring of the quality of the lubricant (2) and the particulate content thereof comprises a connecting hydraulic assembly (19) which is hydraulically connected to the reservoir via a suction connection hydraulic tube (3) with a built-in pump (21) and a return hydraulic connection pipe (2) and in the second position it prevents the flow of the lubricant (2) through it and ensures that the lubricant (2) is provided in the first position (1) and further comprises a two-) of the suction hose (3) returns to the reservoir (1) after the return tube (4). In this unit (5) a measuring block (25) is connected which is hydraulically connected to said distributor (24) and comprises a sensor (26) for identifying the presence of metal particles in the lubricant (2), a coarse oil filter (27), a fine oil a filter (28), a water oil detection sensor (29), and a sensor (30) for monitoring a dielectric oil constant that is hydraulically connected to said distributor (24). The apparatus further comprises a data acquisition unit (7) for connecting each of said sensors (26, 29, 30), said unit (7) being in addition to a measurement control unit (33) with an integrated analog-to-digital converter (34)) for connecting the unit (7) to said sensors (26, 29, 30) includes a memory unit (36) and a unit (37) for establishing a wireless Internet connection, optionally also a power conversion unit (31), wherein said unit (37) for establishing a

wireless internet connection, with the possibility of signaling or signaling, information, but wirelessly, is connected to the data analysis unit (9) and via the latter to the display (17).

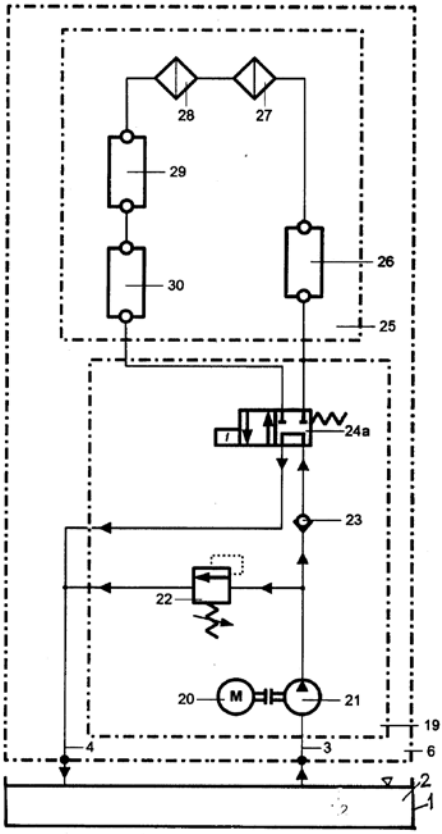

Electronics, IT and Telecommunications

Physical and exact sciences, Industrial manufacturing, material and transport , Other industrial technologies

Industrial products

https://worldwide.espacenet.com/publicationDetails/biblio?FT=D&date=20150630&DB=&locale=en_EP&CC=SI&NR=24579A&KC=A&ND=5

UIL RS

2012

Procedure and Device for Word Context Window Deployment

SI24263A

6. 12. 2012

Jožef Stefan Institute [SI]

Roman Trobec

Postopek in naprava za izvedbo besedilnega kontekstnega okna [SL], Procedure and Device for Word Context Window Deployment [EN]

An object of the invention is a process and a device for automatically displaying already introduced context contexts for the word execution and displaying a text context window that allows the user to improve the efficiency of writing texts. Contextual window shows the context words, that is to say the word occurrence, surrounded by a selected number of adjacent words. While typing or viewing a text, we open a text context window and in it automatically and in real time we display the context of just typed or tagged words. A new word, which is defined by a space and selected; the number of letters is displayed with its context in the text context window as it was entered or also in its grammar formats. Short words can be excluded from the contextual processing by selecting a smaller number of letters in the word. A process that can be embedded into text input and processing systems allows the user to continuously view all the existing contexts of the words just entered, which increases the efficiency and quality of the text.

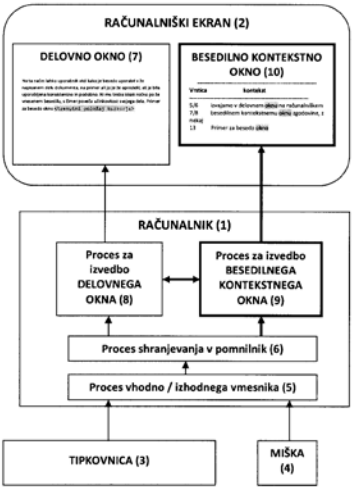

Electronics, IT and Telecommunications

Electronics, IT and telecoms, Industrial manufacturing, material and transport, Other industrial technologies

Communications, Computer related, Other electronics related

https://worldwide.espacenet.com/patent/search/family/050980078/publication/SI24263A?q=SI24263

UIL RS

System and Method for Continuous Supervision and Control the Production Process of Tablets

SI24243A

12. 11. 2012

Jožef Stefan Institute [SI]

Matjaž Gams, Tea Tušar, Darko Zadravec, Matej Horvat

Sistem in postopek za kontinuiran nadzor in upravljanje procesa proizvodnje tablet [SL], System and Method for Continuous Supervision and Control the Production Process of Tablets [EN]

The purpose of the present invention is the system and the process for the continuous control and management of the tablet manufacturing process is to achieve greater flexibility and higher quality of tablet production, a deep understanding of the technological process and effective monitoring of the tablet manufacturing process. In the invention, this is achieved by a process, system, and device that presents the predicted impact of the current process parameters of production on the quality of the finished product in our comparative tablets in a comprehensible graphic and symbolic manner, and leads it further in the appropriate adaptation of the parameters with the aim of improving the quality of the finished product. Process control and operator control in managing the production process by adjusting critical parameters is according to the invention based on a limited maneuver and control space determined by intelligent techniques taking into account the final product quality (tablets). The management of the tablet manufacturing process is carried out with the help of a graphical user interface, which enables both the display

space and the forecasting of the quality of new batches by means of the selected model, and, on the basis of critical elements, suggests in which direction (within the scope of maneuver) if we want to get a better quality final product.
Monitoring and management are possible at every stage of the process for all process parameters. By testing various combinations of parameters on upcoming devices in the tablet manufacturing process, the operator searches for the safest and most meaningful combination that brings the gabo to the best tablets. Based on experimental settings and explanations of the system, it decides in each important step for setting the parameters of the next stage in the process.

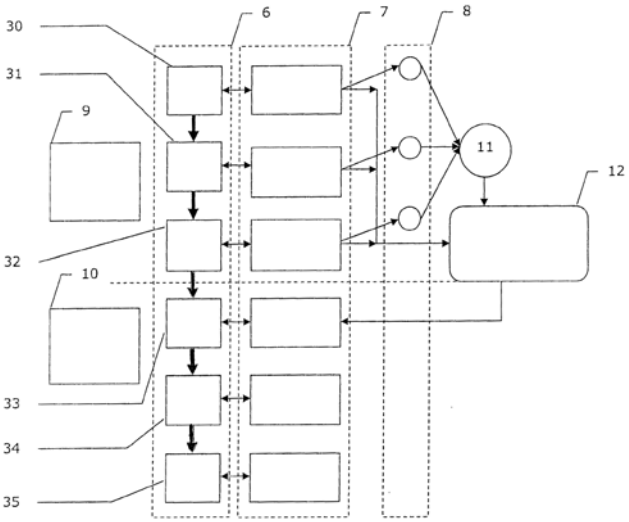

Electronics, IT and Telecommunications

Electronics, IT and telecoms, Measurements and standards, Industrial manufacturing, material and transport

Computer related, Other electronics related, Medical / health related, Industrial products

https://worldwide.espacenet.com/publicationDetails/biblio?FT=D&date=20140530&DB=&locale=en_EP&CC=SI&NR=24243A&KC=A&ND=4

UIL RS

Method for Intelligent Control of Operation of Cooling Unit

SI24163A

31. 7. 2012

Jožef Stefan Institute [SI], LOTRIČ laboratorij za meroslovje d. o. o. [SI]

Damjan Kužnar, Matjaž Gams, Domen Marinčič, Marko Lotrič, Klemen Čufar

Postopek za inteligentni nadzor delovanja hladilne naprave [SL], Method for Intelligent Control of Operation of Cooling Unit [EN]

The subject of the invention is a process for the intelligent control of the operation of the refrigeration system, that is to detect unusual operation and predict the failure of the cooling appliance by means of machine learning, which continuously analyzes the data flows of the environmental parameters and improves predictive accuracy through the user's feedback. The process is characterized in that the process unit (3) implements a process for learning (12) the normal operation of the device, the result of which is the classifier (13), the event detection process (9) based on the wave transformation (8) and the procedure for the classification of detected events (15) and, in the case of a detected significant event (16), a notification of the event and an input of feedback (19) is displayed via the user interface (6).

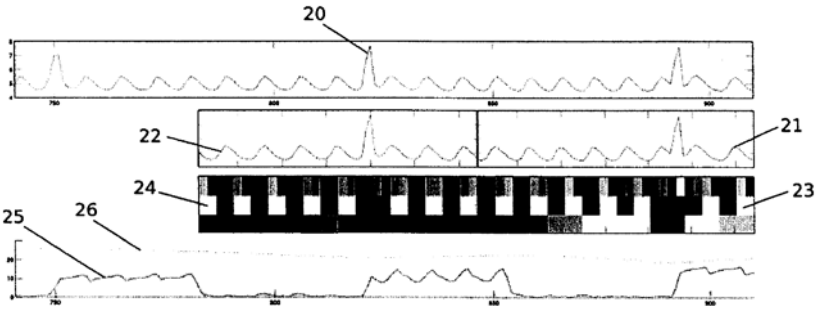

Electronics, IT and Telecommunications

Electronics, IT and telecoms, Physical and exact sciences, Measurements and standards

Computer related, Other electronics related, Energy, Consumer related

https://worldwide.espacenet.com/publicationDetails/biblio?FT=D&date=20140228&DB=&locale=en_EP&CC=SI&NR=24163A&KC=A&ND=4

UIL RS

Humanoid Torso Mechanism

SI24099A

20. 6. 2012

Jožef Stefan Institute [SI]

Igor Kovač, Borut Lenart, Bojan Nemec, Marko Scortegagna , Leon Žlajpah

Človeku podoben mehanizem torza [SL], Humanoid Torso Mechanism [EN]

The subject of the invention is a humanoid torso mechanism that simulates the actual movement of the human body. The torso includes a unique combination of mechanism and controlled rotary axes with actuators (4-8) arranged in a geometry that enables human-like movements. The construction provides mounting surfaces for other humanoid parts such as legs (3), arms (2) or head (1). The structure of the present invention comprises five degrees of freedom. All degrees of freedom are achieved with rotary axes and are concentrated in the lower part of the torso except the last one on the top. The lower torso portion of the assembly includes a torso basic rotation around the vertical axis, which is attached to a base such that the output shaft extends vertically upwards. The next axis is attached to the first axis arrangement structure for the torso tilting function. The next two axes are arranged for tilting the torso forward-and-back in the hip and for the buckling of the mechanical spine structure. That combination of buckling and bending mechanical structures is carried out in a unique way that allows the simulation of buckling and bending the spine in a way very similar to the human body. This is a very realistic and effectively enforced movement that is very similar to human body movement. The last axis mounted on the top of the torso rotates the shoulder girdle around the vertical axes. Movement of each axis is driven by actuators which are attached in each joint of the torso structure and independently controlled by a computer.

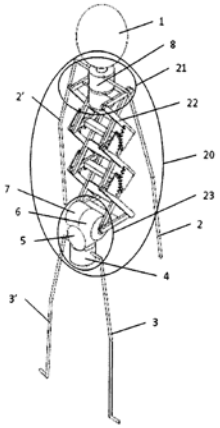

Electronics, IT and Telecommunications

Physical and exact sciences

Medical / health related, Consumer related

https://worldwide.espacenet.com/publicationDetails/originalDocument?FT=D&date=20131231&DB=&locale=en_EP&CC=SI&NR=24099A&KC=A&ND=5

UIL RS

Extended patent application

EP2676776A1

19. 6. 2013

Jožef Stefan Institute [SI]

Igor Kovač, Borut Lenart, Bojan Nemec, Marko Scortegagna, Leon Žlajpah

Humanoid Torso Mechanism

https://worldwide.espacenet.com/publicationDetails/biblio?FT=D&date=20131225&DB=&locale=en_EP&CC=EP&NR=2676776A1&KC=A1&ND=4

System for Select of Offers and Design Requirements in the Adjusment of Consumption and Distributed Electrical Generation

SI24057A

20. 4. 2012

Inea d. o. o. [SI]

Mitja Bizjak, Erik Dovgan, Bogdan Filipič, Tea Tušar, Gregor Černe

Sistem za izbiro ponudb in oblikovanje zahtev v prilagajanju odjema in razpršene proizvodnje električne energije [SL], System for Select of Offers and Design Requirements in the Adjusment of Consumption and Distributed Electrical Generation [EN]

This invention relates to the system (1) for the selection of offers and the formulation of requirements in the adjustment of consumption and distributed generation of electricity from customers (3) of electricity, customers / producers (4) and distributed sources (5) regularly receives information on electricity consumption (8) and offers (6) for adjustment. The information on electricity consumption (8) contains the sender's code, the average power consumption and the interval in which the average power was measured. The adjustment offer (6) contains the course of adjusted energy at intervals, the interval to which the course applies, and the price for adjustment, at which the end user of the distribution network will be paid upon possible implementation of the adjustment request. The system (1) receives from the user (2) of the system (1) the need (7) for adjustment. The need (7) for adjustment contains the desired adjustment energy, the adjustment interval and the adjustment price at which the user is still willing to repay the end customer. Upon receiving the need (7) for adjustment from the user, the system (1) selects the most favorable offers (6) for adjustment according to the economic criteria.
The system (1) selects so many offers that it either fulfills the user's request or uses all the appropriate offers that are currently available and economically justified. After selecting the bids, the system (1) sends the request (11) for adjustment to the senders of the selected bids. The adjustment request (11) contains the required client consumption process. After sending customization requests, the system receives customization messages. The system regularly monitors the progress of adjustments. From the information on electricity consumption of the end user of the electricity network, it calculates the amount of adjusted energy and compares it with the adjustment request. In the event of a deviation, the system itself creates a new need for adaptation and transmits it to the system (itself) for processing.

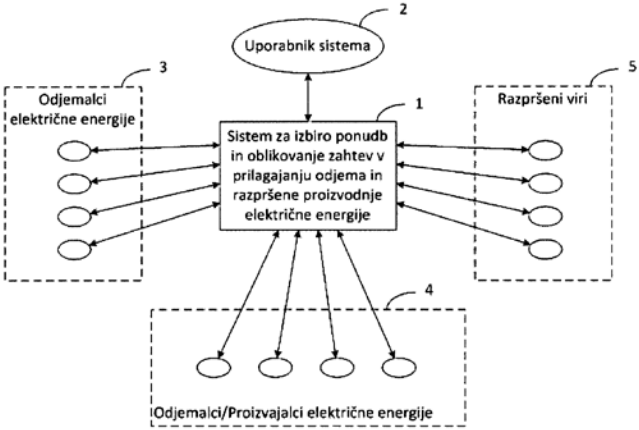

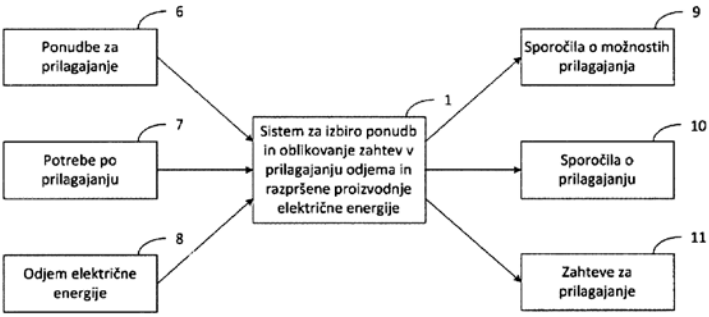

Electronics, IT and Telecommunications

Electronics, IT and telecoms, Energy

Energy

https://worldwide.espacenet.com/patent/search/family/049485988/publication/SI24057A?q=si24057

UIL RS

2011

Intelligent Security System and Method for Detection of Unusual Behaviour

SI23855A

5. 8. 2011

Jožef Stefan Institute [SI], Špica International d. o. o. [SI]

Erik Dovgan, Matjaž Gams, Rok Piltaver, Gašper Pintarič, Andrej Planina, Bogdan Pogorelc

Inteligentni varnostni sistem in postopek za odkrivanje neobičajnega obnašanja [SL], Intelligent Security System and Method for Detection of Unusual Behaviour [EN]

The subject of the invention is an intelligent security system and a method for detecting abnormal behavior in rooms requiring high security, based on a real-time location system, a set of additional sensors, context processing and intelligent software that automatically learns patterns of behavior of observed entities are people and important equipment, and according to the learned models recognizes unusual behavior, which informs the user of the system through various terminals. The system consists of a communication infrastructure, a processor server and a database. In the first phase, the process performs pre-processing of sensory data and semantic enrichment of them by contextual processing. In the second phase, the pre-processed data is taken over by an expert system, which constantly checks whether any of the set security rules have been violated, and several independent intelligent modules, which detect unusual behavior using artificial intelligence methods. In the last phase of the process, a meta-classification is performed, which determines which events need to be notified to the user and what priority each notification has.

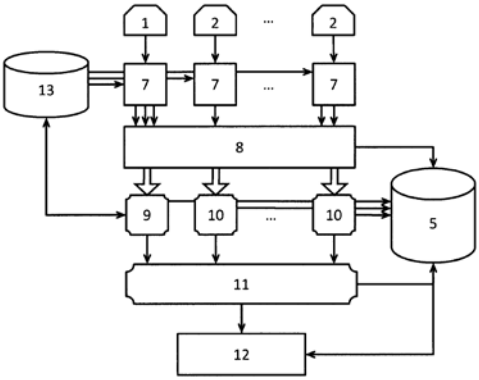

Electronics, IT and Telecommunications

Electronics, IT and telecoms

Medical / health related

https://worldwide.espacenet.com/patent/search/family/047750192/publication/SI23855A?q=si23855

UIL RS

2010

Method for Self Organizing Network Operation

US8472334B2

30. 6. 2010

Janez Bešter [SI], Tomaž Javornik [SI], Andreas Kalagasidis [SI], Gorazd Kandus [SI], Andrej Kos [SI], Bojan Likar [SI], Luka Mali [SI], Robert Posel [SI], Urban Sedlar [SI], Janez Sterle [SI], Accelera Mobile Broadband Inc [US]

Janez Bešter, Tomaž Javornik, Andreas Kalagasidis, Gorazd Kandus, Andrej Kos, Bojan Likar, Luka Mali, Robert Posel, Urban Sedlar, Janez Sterle

Method for Self Organizing Network Operation

The present invention relates to wireless cellular telecommunication networks and, in particular, to control and management of self organizing wireless cellular telecommunication network. A method for network planning and frequency optimization in LTE networks by determining the optimal base station configuration parameters, comprises a base station initialization, an initial base station configuration, an iterative measurement procedure, an optimization process, a verification of operation, and a periodical maintenance procedure.

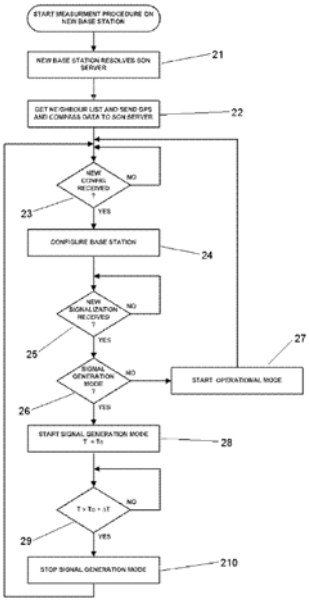

Electronics, IT and Telecommunications

Electronics, IT and telecoms

Communications

https://worldwide.espacenet.com/patent/search/family/045399659/publication/US8472334B2?q=US8472334B2

US

Iterative Localization Techniques

US2011317570A1

28. 6. 2010

Janez Bešter [SI], Tomaž Javornik [SI], Andreas Kalagasidis [SI], Gorazd Kandus [SI] Andrej Kos [SI], Bojan Likar [SI], Mihael Mohorčič [SI], Robert Posel [SI], Miha Smolnikar [SI], Aleš Švigelj [SI], Accelera Mobile Broadband Inc [US]

Janez Bešter, Tomaž Javornik, Andreas Kalagasidis, Gorazd Kandus, Andrej Kos, Bojan Likar, Mihael Mohorčič, Robert Posel, Miha Smolnikar, Aleš Švigelj

Iterative Localization Techniques

The present invention refers to iterative localization techniques with wireless communication systems for rural environment with limited number of base stations in the range of the mobile station and urban environment with multipath propagation channel and several base stations in the range of mobile station.

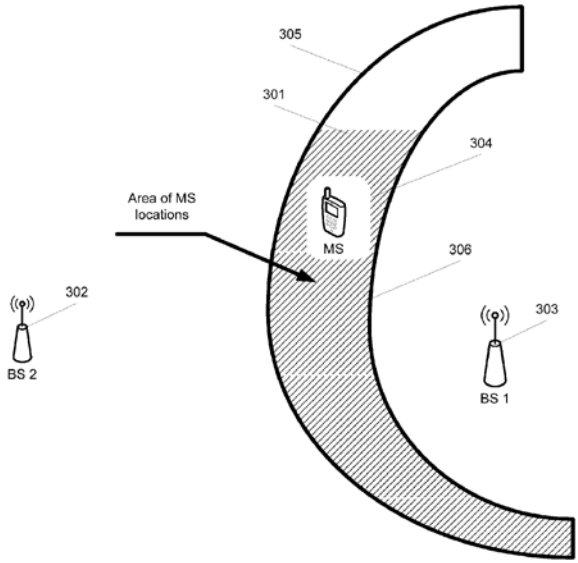

Electronics, IT and Telecommunications

Electronics, IT and telecoms

Communications

https://worldwide.espacenet.com/patent/search/family/045352489/publication/US8565106B2?q=US8565106B2

US

2008

Reducing Oscillations in a Control System

EP2356522A1

17. 11. 2008

Danfoss AS [DK]

Janko Petrovčič, Damir Vrančić

Reducing Oscillations in a Control System

This invention relates to a method of performing control of a closed loop control system controlled by a controller, wherein said controller delivers the control input to at least one control unit in said system e.g. a valve, said method comprises the steps of: - detecting the oscillation level in said control input to said control unit, - amplifying said control input by a multiplication factor based on said detected oscillation level. Thereby characteristics of the control unit are changed as oscillations are detected. Thereby oscillations are minimized, and e.g. the wear of the control units is reduced and an improved control is obtained.

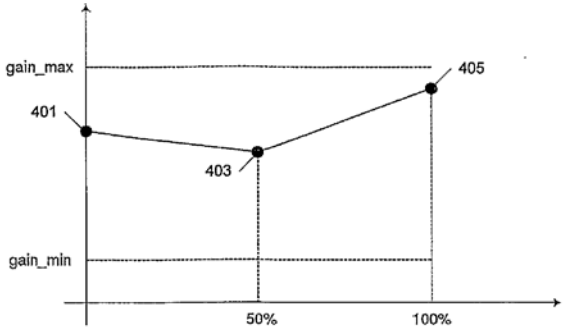

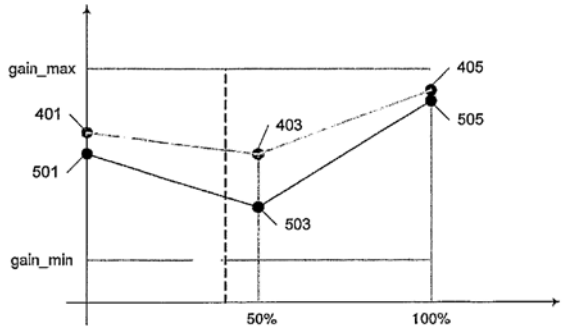

Electronics, IT and Telecommunications

Electronics, IT and telecoms, Industrial manufacturing, material and transport

Industrial products

https://worldwide.espacenet.com/patent/search/family/041650304/publication/EP2356522A1?q=ep2356522

EPO

Extended patent application

CN102257444A

16. 11. 2009

Danfoss AS [DK]

Janko Petrovčič, Damir Vrančić

Reducing Oscillations in a Control System

https://worldwide.espacenet.com/patent/search/family/041650304/publication/CN102257444A?q=pn%3DCN102257444A

Extended patent application

DK2356522T3

16. 11. 2009

Danfoss AS [DK]

Janko Petrovčič, Damir Vrančić

Fremgangsmåde til reduktion af oscillationer i et reguleringssystem

https://worldwide.espacenet.com/patent/search/family/041650304/publication/DK2356522T3?q=pn%3DDK2356522T3

Extended patent application

WO2010054657A1

16. 11. 2009

Danfoss AS [DK], Janko Petrovčič [SI], Damir Vrančić [SI]

Janko Petrovčič, Damir Vrančić

Reducing Oscillations in a Control System

https://worldwide.espacenet.com/patent/search/family/041650304/publication/WO2010054657A1?q=pn%3DWO2010054657A1

Extended patent application

PL2356522T3

16. 11. 2009

Danfoss AS [DK]

Janko Petrovčič, Damir Vrančić

Reducing Oscillations in a Control System

https://worldwide.espacenet.com/patent/search/family/041650304/publication/PL2356522T3?q=pn%3DPL2356522T3

Extended patent application

RU2011124177A

16. 11. 2009

Danfoss AS [DK]

Janko Petrovčič, Damir Vrančić

Reducing Oscillations in a Control System

https://worldwide.espacenet.com/patent/search/family/041650304/publication/RU2011124177A?q=pn%3DRU2011124177A

Extended patent application

SI2356522T1

16. 11. 2009

Danfoss AS [DK]

Janko Petrovčič, Damir Vrančić

Zmanjševanje oscilacij v kontrolnem sistemu [SL], Reducing Oscillations in a Control System [EN]

https://worldwide.espacenet.com/patent/search/family/041650304/publication/SI2356522T1?q=pn%3DSI2356522T1

Procedure for Measurement of Inner Dimensions of Footwear

SI22848A

4. 8. 2008

UCS d. o. o. [SI]

Aleš Jurca, Damir Omrčen

Postopek za merjenje notranjih dimenzij obuvala [SL], Procedure for Measurement of Inner Dimensions of Footwear [EN]

The subject of the invention is a procedure for measurement of inner dimensions of footwear, which enables a precise determination of inner footwear dimensions by means of a three-dimensional cloud of points of the inner footwear surface. According to the procedure for measurement of inner dimensions of footwear in accordance with the invention, only a ground plan and a side view footwear snapshots (X-ray or other kind, based on penetration of radiation through matter) are used for calibration of the 3D model of footwear, in which case a contrasting agent is put into footwear, by which a contrast is achieved between the footwear interior and the remaining part of the footwear, considering the greyness level of the X-ray snapshot.

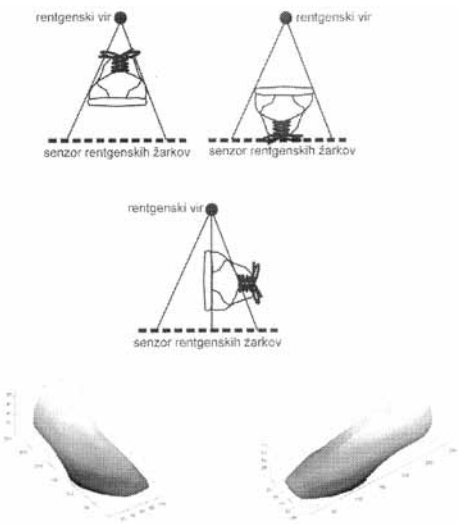

Electronics, IT and Telecommunications

Electronics, IT and telecoms, Industrial manufacturing, material and transport

Computer related, Consumer related, Industrial products

https://worldwide.espacenet.com/patent/search/family/041727962/publication/SI22848A?q=si22848

UIL RS

System and Device for Speech-controlled Telephone Communication

SI22822A

23. 6. 2008

Jožef Stefan Institute [SI], Špica d. o. o. [SI]

Matjaž Gams, Mitja Kolbe, Andrija Pušić, Tea Tušar

Postopek in naprava za inteligentni nadzor vstopanja [SL], System and Device for Speech-controlled Telephone Communication [EN]

This invention relates to the system for speech-controlled telephone communication according to the invention enables the user by way of speech without the use of tactile communication to perform a telephone communication with the system which includes a microphone (1.2), headphones (1.3), speech processor device (1.1) which performs speech recognition or remote microphone (1.7), speaker (1.6), adapted speech processing device (1.5) which apart from speech recognition also performs additional speech pre-processing and a control processor device (1.4) where the application for establishing the telephone connection and speech transfer is running. The headphones (1.3) and microphone (1.2) can be by cable or on a wireless basis linked to the speech processor device (1.1) for speech recognition which is first connected to the control processor device (1.4) which runs the application of establishing the telephone connection and speech transfer. At the same time the speaker (1.6) and the remote microphone (1.7) are by cable or by wireless link connected to the adapted speech processing device (1.5) for additional pre-processing and speech recognition, which is first connected to the control processor device (1.4) running the application for establishing the telephone connection and speech transfer.

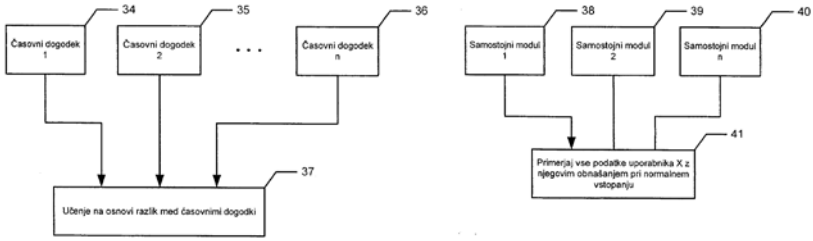

Electronics, IT and Telecommunications

Electronics, IT and telecoms

Communications, Computer related

https://worldwide.espacenet.com/patent/search/family/041360839/publication/SI22822A?q=si22822

UIL RS

Extended patent application

DE102009017873A1

17. 4. 2009

Jožef Stefan Institute [SI], Špica d. o. o. [SI]

Matjaž Gams, Mitja Kolbe, Andrija Pušić, Tea Tušar

Verfahren und Vorrichtung für intelligente Zugangsberechtigungskontrolle

https://worldwide.espacenet.com/patent/search/family/041360839/publication/DE102009017873A1?q=si22822

Adaptive Device for Controlling Household Appliances

SI22721A

24. 1. 2008

Gorenje d. d. [SI]

Konrad Steblovnik, Jurij Tasić, Damjan Zazula

Učljiva naprava za krmiljenje gospodinjskih naprav [SL], Adaptive Device for Controlling Household Appliances [EN]

The present invention relates to the adaptive device for controlling household appliances made from a control unit (1) inside each individual household appliance (2), a central unit (3) for acquiring, processing and distribution of the enhanced data, which is required for the control of each unit (1) inside the individual appliances (2) and a mean (4) for the transfer of data between units (1) and (3) in both directions.

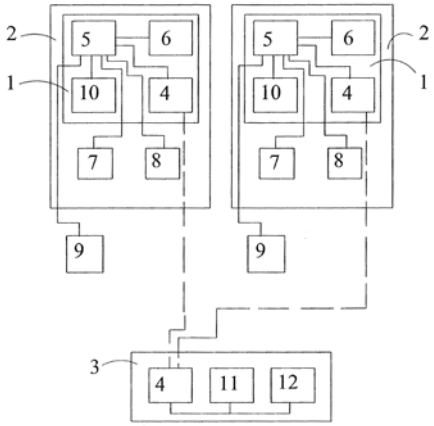

Electronics, IT and Telecommunications

Electronics, IT and telecoms

Other electronics related, Consumer related

https://worldwide.espacenet.com/patent/search/family/041010076/publication/SI22721A?q=si22721

UIL RS

2007

Device and Procedure for the Transfer of a Personal Nutrition Table and Reference Values for the Intake of Food from a Computer Program to a Kitchen Scale

SI22693A

6. 11. 2007

Jožef Stefan Institute [SI]

Barbara Koroušić Seljak, Gregor Papa

Naprava in postopek za prenos osebne prehranske tabele in referenčnih vrednosti za vnos hranil iz računalniškega programa v kuhinjsko tehtnico [SL], Device and Procedure for the Transfer of a Personal Nutrition Table and Reference Values for the Intake of Food from a Computer Program to a Kitchen Scale [EN]

The present invention relates to a device and procedure for the transfer of a personal nutrition table and reference values for the intake of food from a computer program to a kitchen scale. The subject of the invention is a device and procedure for the transfer of a personal nutrition table and reference values for the intake of food from a computer program to a kitchen scale. The procedure is based on a computer program for the preparation of a personal nutrition table and the list of reference values, a programmable circuit for feeding the personal nutrition table, reference values and the required personal data in the kitchen scale as well as interface which enables the transfer of data from the computer into the scale and vice-versa under a communication protocol. Such a scale is aimed at all those who have to or want to exactly monitor the intake of energy or the selected nutrients like carbon hydrates, albumins, fat, water from food, potassium, phosphates, iron, sodium, calcium, phenylalanine, folic acid and other (diabetics, persons with kidney diseases, phenylketonurics, epileptics, sportsmen,....). The scale can serve also for an estimate and verification of the suitability of the intake of the selected nutrients, for example fibres upon obstipation or vitamins when a lack of them is suspected. The simplicity of use (on-place) and the speed of recording the intake of nutrients opens opportunities of its application in hospitals, old-age homes and rehabilitation centres for a quick estimate of the actual intake of energy and nutrients.

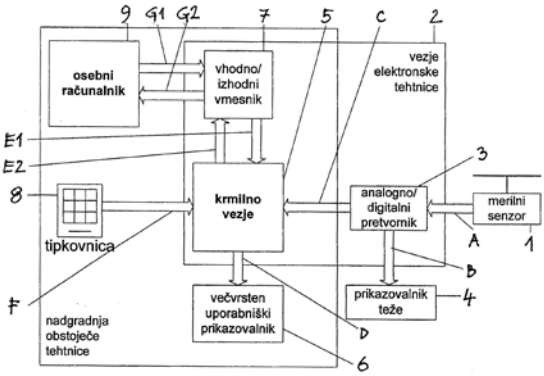

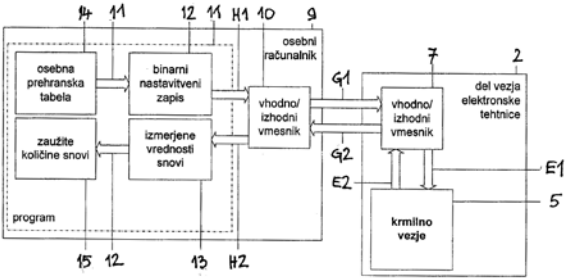

Electronics, IT and Telecommunications

Electronics, IT and telecoms

Other electronics related, Consumer related

https://worldwide.espacenet.com/patent/search/family/040822899/publication/SI22693A?q=si22693

UIL RS

2006

Optical Device and Procedure for Displaying Images Permanently Visible from All Sides

SI22319A

17. 5. 2006

Kolektor group Vodenje in upravljanje družbe d. o. o. [SI]

Franci Lahajnar, Leon Lahajnar, Janez Leskovec

Optična priprava in postopek za prikazovanje slike, trajno vidne z vseh smeri [SL], Optical Device and Procedure for Displaying Images Permanently Visible from All Sides [EN]

The object of the invention is a device made from an electro-optical display (1) and electro- optical lock (2) which are made as a rotational skin with a common axis of symmetry (A). The lock (2) is made with electro-optical locking strips (21) located tightly one next to the other, while each of them operates as a slot. Within very short timeframes the control circuit activates at least one locking strip (21t) and simultaneously also the image (di) corresponding to each of the activated locking strips in such an area of the display screen (1) that in the panel, which includes the axis of symmetry (A), each of the central lines (icl) of each image (di) is in diametrical opposition to the locking strip (21t) the image (di) corresponds to. The time between the consecutive activations of any of the locking strips (21) is shorter than 1/24 of a second. The integral parts of the device do not move during operation so the operation is noiseless.

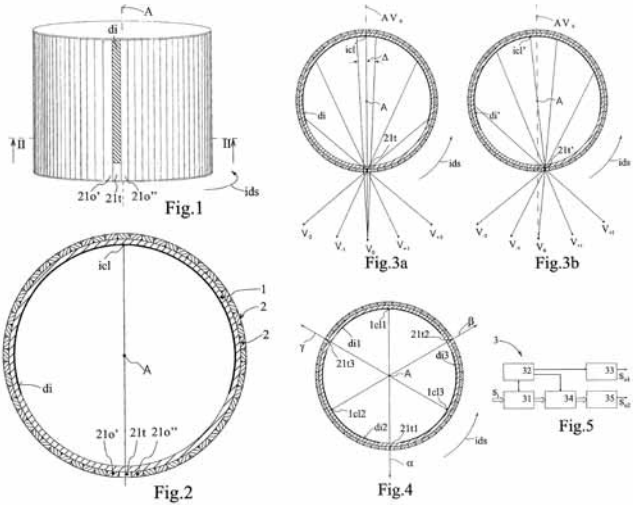

Electronics, IT and Telecommunications

Electronics, IT and telecoms, Industrial manufacturing, material and transport

Computer related, Other electronics related, Industrial products

https://worldwide.espacenet.com/patent/search/family/038871295/publication/SI22319A?q=si22319

UIL RS

Procedure for Performing Division by an Arithmetic Divisor with Continuous Settlement

SI22218A

30. 1. 2006

Jožef Stefan Institute [SI]

Roman Trobec, Rainer Trummer

Postopek za izvedbo deljenja z aritmetičnim delilnikom z neprestanim poravnavanjem [SL], Procedure for Performing Division by an Arithmetic Divisor with Continuous Settlement [EN]

The described procedure relates to a method for arithmetic division of positive integers by a corresponding digital circuit of a divisor, which divides the given dividend Ro with the given divisor D in such a way that by the sequence of operations it calculates the final quotient Qk and residue Rk. The procedure according to the invention results in a shorter division time for the individual values of both operators. Important innovative parts of the divisor are the settlement device which from the two inputs, the divisor D and the intermediate residue Ri generates on the output an aligned divisor Ai+1 and the corresponding intermediate quotient Pi+1, as well as two parallel totalisers, which ensure faster performance of the dividing process. The arithmetic divider with continuous settlement is made of the following sequence of operations: from the settlement Ri and D inputs it reads the outputs Ai+1 and Pi+1; subtract in parallel Ri - Ai+1 and Ri -1/2 Ai+1; if the result Ri - Ai+1 is positive, it is stored as an intermediate residue Ri+1 and Qi + Pi+1 as the intermediate quotient Qi+1,

otherwise it stores the result Ri - 1/2 Ai+1 as the intermediate residue Ri+1 and Qi + 1/2 Pi+1 as the intermediate quotient Qi+1; repeat the aforementioned steps until Ri+1 becomes less than D.

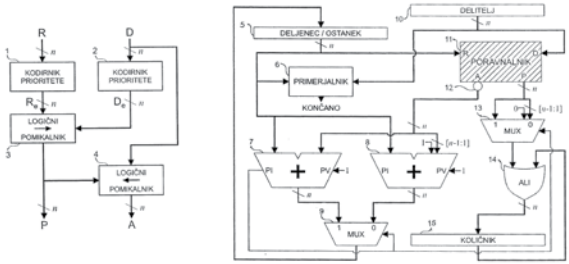

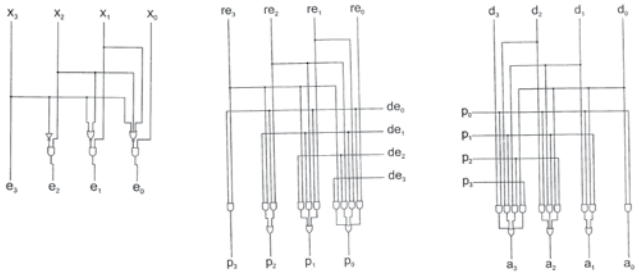

Electronics, IT and Telecommunications

Electronics, IT and telecoms, Physical and exact sciences

Computer related

https://worldwide.espacenet.com/patent/search/family/038457668/publication/SI22218A?q=si22218

UIL RS

2005

Circuit for Locking of a Test Bus

SI21978A

20. 1. 2005

Jožef Stefan Institute [SI]

Anton Biasizzo, Franc Novak

Vezje za zaklepanje testnega vodila [SL], Circuit for Locking of a Test Bus [EN]

The subject of the submitted invention is a circuit for locking a test bus within electronic circuits, which include a test bus, designed according to the IEEE 1149.1 or IEEE 1149.4 standards. The circuit for locking a test bus is used for preventing access to electronic circuits and systems during their standard operation via the existing testing infrastructure, which include a test bus designed according to the IEEE 1149.1 or IEEE 1149.4 standards. The circuit for locking of a test bus, which consists of a circuit for decoding test commands (1), a multiplexer (2), a register for entering locks and keys (3), a key register (4), a lock register (5) and a comparator (6) is characterised by the fact that the circuit for decoding of test commands (1) decodes two new commands: UNLOCK and LOCK while generating control signals (22), (23), (24), and (25) accordingly.

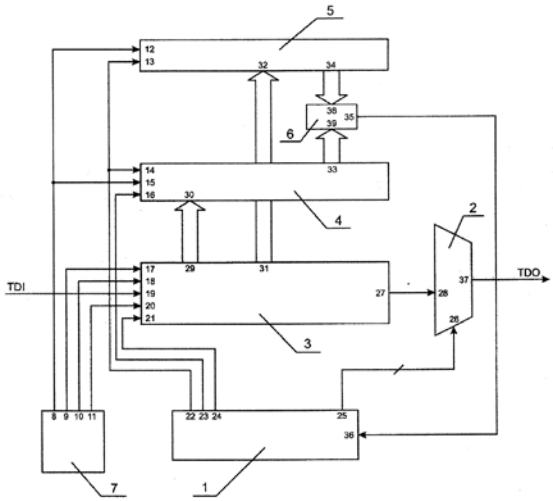

Electronics, IT and Telecommunications

Electronics, IT and telecoms

Other electronics related

https://worldwide.espacenet.com/patent/search/family/036951077/publication/SI21978A?q=si21978

UIL RS

2004

Method for High Level Authentication and Protection of Communication Channels by Way of Message Authentication Codes

SI21902A

18. 10. 2004

Jožef Stefan Institute [SI]

Denis Trček

Metoda za močno overjanje in ščitenje komunikacijskih kanalov s pomočjo kod za overovitev sporočil [SL], Method for High Level Authentication and Protection of Communication Channels by Way of Message Authentication Codes [EN]

The subject of the submitted invention is a family of cryptographic protocols, which provide authentication and exchange of secret values, typical session keys by using KZOS message authentication codes based on simple single-directional condensing functions and providing their integrity. Subject of the invention is also a synchronization protocol belonging to the same family of protocols which is also able to use only single-directional condensing functions for KZOS and represents a support protocol in such a way that it enables an authenticated and comprehensive exchange of accidental values for the application in cases, when there is no synchronised time standard available. The result of using KZOS which are based on single-directional condensing functions are mathematically less intensive protocols, which enable effective high level of authentication and exchange of session keys also by using devices with low processing power.

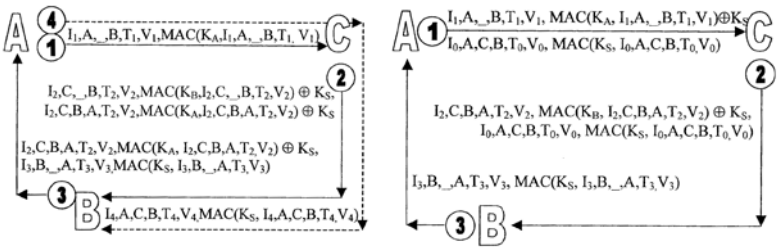

Electronics, IT and Telecommunications

Electronics, IT and telecoms

Communications

https://worldwide.espacenet.com/patent/search/family/036808196/publication/SI21902A?q=si21902

UIL RS

2003

Device for Displaying Images Within 360 Degrees Around the Device

SI21383A

8. 11. 2002

Jan Babič [SI]

Jan Babič

Naprava, ki omogoča hkratno videnje slike 360 stopinj okoli naprave [SL], Device for Displaying Images Within 360 Degrees Around the Device [EN]

The object of the invention is a device for simultaneous observation of images within 360 degrees around it, made in such a way that it allows observing images and modification or changing of images during its operation without interruption and providing no distortion of the image within 360 degrees around the device at the same time. The device according to the invention is made of a mask (1), preferably a cylinder-shaped one, which can be rotated around its axis (2) with any drive (3) and features a slot (4) on its enclosure, which runs approximately parallel to axis (2). Inside the mask (1) there is at least one screen (5) next to the diametrical surface with controlled light points, for example liquid crystals (LCD) or light diodes. The main feature of the invention is that between the processor (6) and screen (5) there is a microprocessor-based controller (9), which assigns the location of any point of the picture, which is meant for the observer to see, to a new location on screen (5) depending on the distance of the eye of the spectator from screen (5), the screen (5) angle regarding the visibility axis (10) and any current distance between slot (4) and the monitoring point (12) on screen (5).

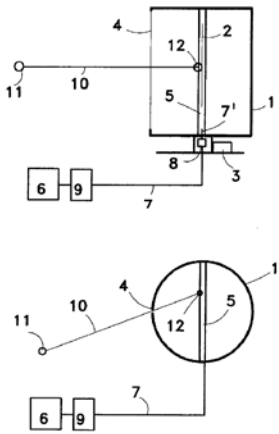

Electronics, IT and Telecommunications

Electronics, IT and telecoms

Computer related, Other electronics related

https://worldwide.espacenet.com/patent/search/family/032653790/publication/SI21383A?q=si21383

UIL RS

2002

Procedure and Device for Radio Transmission of Data with Adjustable Bit Speed Based on N-MSK Signals

SI21291A

24. 7. 2002

Jožef Stefan Institute [SI]

Tomaž Javornik, Gorazd Kandus

Postopek in naprava za radijski prenos podatkov s prilagodljivo bitno hitrostjo na osnovi N-MSK signalov [SL], Procedure and Device for Radio Transmission of Data with Adjustable Bit Speed Based on N-MSK Signals [EN]

The subject of the introduced invention is the procedure and device for radio transmission of data with adjustable bit speed based on N-MSK signals. The device simply and effectively adjusts the modulation level to the current situation in the radio channel. By doing so it uses the same N-MSK detector and the same N-MSK detector for generating and detecting J-MSK signals, where J is less or equal to N.

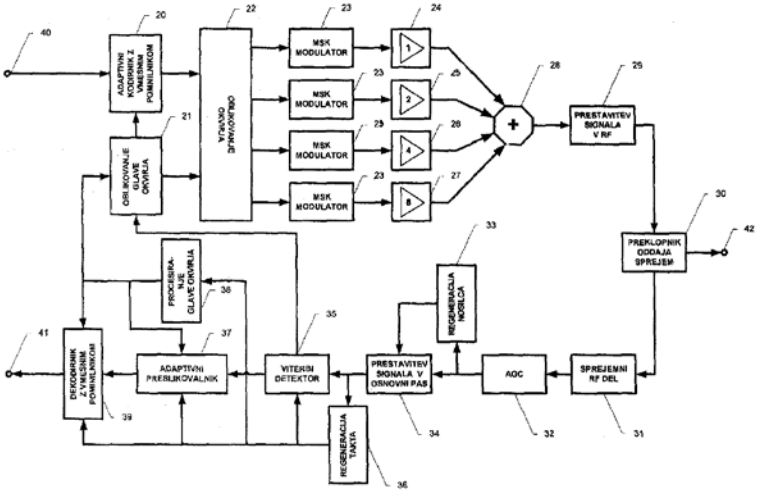

Electronics, IT and Telecommunications

Electronics, IT and telecoms

Communications, Computer related

https://worldwide.espacenet.com/patent/search/family/031885316/publication/SI21291A?q=si21291

UIL RS

Detector Assembly and Device for Measuring the Sparking Intensity of Collector Engines

SI21381A

10. 12. 2002

Jožef Stefan Institute [SI]

Đani Juričič, Janko Petrovčič, Dejan Tinta

Detektorski sklop in naprava za merjenje intenzitete iskrenja kolektorskih motorjev [SL], Detector Assembly and Device for Measuring the Sparking Intensity of Collector Engines [EN]

The object of the invention is a detector assembly and device for measuring the sparking intensity of collector engines. The device can be classified into the technical field of testing dynamo-electric engines solving the problem of measuring the sparking intensity of the collector or at the brushes of collector engines. This technical problem is solved by direct measuring of the high-frequency noise signal on the brushes of the tested engine (12), which is tapped by two separating condensers (2A and 2B). An additional galvanic insulation is provided by the insulating high-frequency transformer (3) which is followed by a pass-band filter (4). Following the detection by a high-frequency (video) detector (5) there is a quasi-peak detector (7), a smoothing filter (8), a signal level display (9) as well as level histogram display (10). The sparking noise signal is tapped directly at the brushes of the tested engine (1) and is dealt with as a high-frequency signal in the form of conductive jamming in the several MHz band. Typical of the invention is also that for the characterisation of sparking a quasi-peak detector (7) and level histogram display (10) are used.

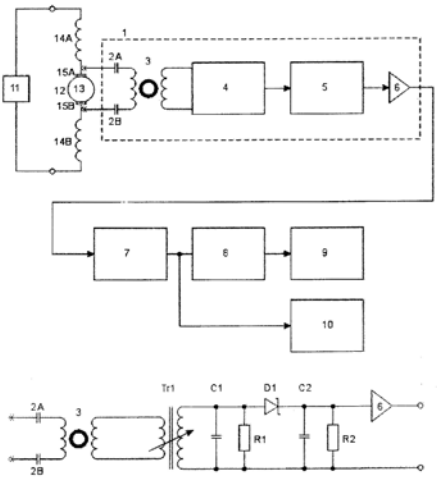

Electronics, IT and Telecommunications

Electronics, IT and telecoms

Consumer related, Industrial products

https://worldwide.espacenet.com/patent/search/family/032653806/publication/SI21381A?q=si21381

UIL RS

Self-tuning Controller for Non-linear Processes Described by Set of Local Linear Models

WO2004059400A1

27. 12. 2002

INEA d. o. o. [SI]

Ventsislav Ventsislavov Asenov, Sašo Blažič, Kosta Petrov Boshnakov, Miha Božiček, Gregor Dolanc, Samo Gerkšič, Mincho Bankov Hadzhiyski, Nikolinka Georgieva Hristova, Zack Iliadis, Aneta Ivanova, Robert E. King, Juš Kocijan, Ivaylo Parvanov Koleshanov, Fotis N. Koumboulis, Zoran Marinšek, Metodi Nikolov Stefanov, Demos Sapidis, Igor Škrjanc, Anna Stathaki, Stanko Strmčnik, Kiril Todorov, Damir Vrančić

Self-tuning Controller for Non-linear Processes Described by Set of Local Linear Models

The invention relates to a self-tuning non-linear controller intended for control of a class of non-linear processes that may be represented by a fuzzy set of low-order local linear models that are selected using a scheduling variable. The model is obtained by means of experimental modelling using a special on-line learning procedure combining model identification with pre- and post-identification steps that provide reliable operation. There is a choice of several novel control algorithms suitable for different processes that may be used for control and whose parameters are automatically tuned from the model. The controller monitors the resulting control performance and may react to detected irregularities. The controller is suitable for implementation on hardware platforms such as programmable logic or open controllers.

№	Overshoot	Settling time	Decay	Performance Index
1	excellent	excellent	excellent	excellent
2	excellent	excellent	good	*** (not feasible)
3	excellent	excellent	poor	*** (not feasible)
4	excellent	good	excellent	very good
5	excellent	good	good	*** (not feasible)
6	excellent	good	poor	*** (not feasible)
7	excellent	poor	excellent	satisfactory
8	excellent	poor	good	*** (not feasible)
9	excellent	poor	poor	*** (not feasible)
10	good	excellent	excellent	very good
11	good	excellent	good	good
12	good	excellent	poor	good
13	good	good	excellent	very good
14	good	good	good	good
15	good	good	poor	satisfactory
16	good	poor	excellent	satisfactory
17	good	poor	good	satisfactory
18	good	poor	poor	poor
19	poor	excellent	excellent	poor
20	poor	excellent	good	poor
21	poor	excellent	poor	poor
22	poor	good	excellent	poor
23	poor	good	good	poor
24	poor	good	poor	poor
25	poor	poor	excellent	poor
26	poor	poor	good	poor
27	poor	poor	poor	poor

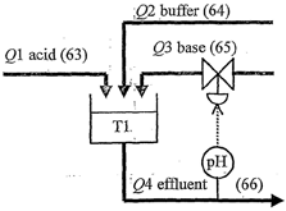

Electronics, IT and Telecommunications

Electronics, IT and telecoms

Computer related, Industrial products

https://worldwide.espacenet.com/patent/search/family/032679806/publication/WO2004059400A1?q=PCT%2FSI2002%2F000029%20

WIPO

Extended patent application

AU2002368521A1

27. 12. 2002

INEA d. o. o. [SI]

Ventsislav Ventsislavov Asenov, Sašo Blažič, Kosta Petrov Boshnakov, Miha Božiček, Gregor Dolanc, Samo Gerkšič, Mincho Bankov Hadzhiyski, Nikolinka Georgieva Hristova, Zack Iliadis, Aneta Ivanova, Robert E. King, Juš Kocijan, Ivaylo Parvanov Koleshanov, Fotis N. Koumboulis, Zoran Marinšek, Metodi Nikolov Stefanov, Demos Sapidis, Igor Škrjanc, Anna Stathaki, Stanko Strmčnik, Kiril Todorov, Damir Vrančić

Self-tuning Controller for Non-linear Processes Described by Set of Local Linear Models

https://worldwide.espacenet.com/patent/search/family/032679806/publication/AU2002368521A1?q=PCT%2FSI2002%2F000029%20

2001

Procedure and Circuit for Temperature Control

SI20933A

23. 5. 2001

Jožef Stefan Institute [SI]

Uroš Kač, Srečko Maček, Franc Novak, Marina Zarnik Santo

Postopek in vezje za nadzor temperature [SL], Procedure and Circuit for Temperature Control [EN]

The subject of the submitted invention is a procedure and circuit for temperature control, which uses an existing testing infrastructure based on the IEEE 1149.4 protocol for data transmission, corresponding to the measured temperature and their comparison to reference values. This way the need for using dedicated lines for the transmission of temperature measurements is eliminated. By selecting voltage thresholds of n comparators (17) in the selected analogue border modules of n elements, which meet the IEEE 1149.4 specifications, a simple n-bit A/D converter is implemented. It is used for processing signals, corresponding to the measured temperature. For connecting the temperature sensor terminals (1), (2), or (5) are used.

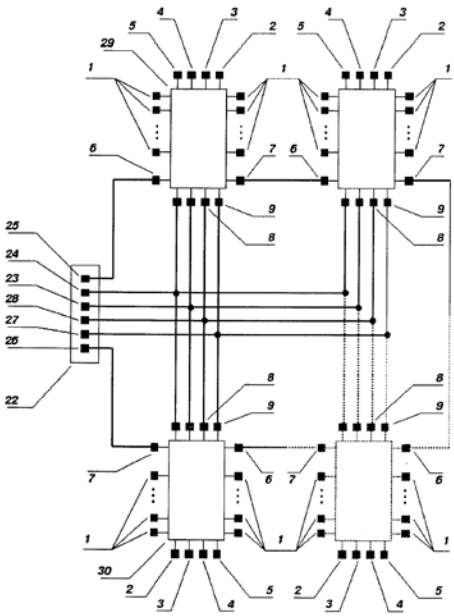

Electronics, IT and Telecommunications

Electronics, IT and telecoms, Measurements and standards

Computer related, Energy, Industrial products

https://worldwide.espacenet.com/patent/search/family/020432899/publication/SI20933A?q=si20933

UIL RS

Connection Network for Correctly Distributed Modules

SI20936A

29. 5. 2001

Jožef Stefan Institute [SI]

Roman Trobec

Povezovalna mreža za pravilno porazdeljene module [SL], Connection Network for Correctly Distributed Modules [EN]

The invention describes the extension of existing regular networks, so that they correctly link any number of adjacent d elements. Such networks are called d-networks, they feature a regular structure and an isomorphic 1-environment as well as any d grade. They are built by using several planes, including only parallel links in a two-dimensional and 3-D space and if required also toroid links. From the d-networks optimised d-networks can be selected, which best suit the given optimisation criteria. The connecting network according to the invention, which enables the transmission and exchange of digital and analogue data between correctly located process modules in a two-dimensional and 3-D space is characterised by the fact that it is made up of any number of links between adjacent elements and that these links between adjacent elements have the property of not crossing each other on any individual connecting panel.

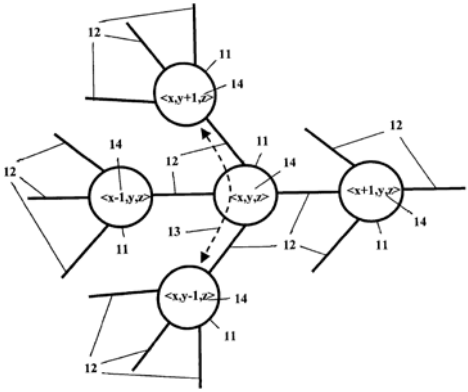

Electronics, IT and Telecommunications

Electronics, IT and telecoms

Communications, Computer related, Other electronics related

https://worldwide.espacenet.com/patent/search/family/020432908/publication/SI20936A?q=si20936

UIL RS

Procedure and Circuit for Measuring Temperature with Distributed, Frequency Dependant Structures

SI21109A

27. 11. 2001

Jožef Stefan Institute [SI]

Srečko Maček, Franc Novak, Marina Santo Zarnik

Postopek in vezje za merjenje temperature s porazdeljenimi frekvenčno odvisnimi strukturami [SL], Procedure and Circuit for Measuring Temperature with Distributed, Frequency Dependant Structures [EN]

The invention deals with a procedure and circuit for measuring temperature with distributed frequency dependant structures. Subject of the introduced invention is the procedure and circuit for measuring temperature with distributed frequency dependant structures. The procedure is based

on measuring the circuit impedance under direct current conditions and the circuit impedance at selected frequencies. The value of temperature in places, where the individual temperature dependant resistive elements are located is calculated based on a set of equations, which represent the circuit impedance under direct current conditions and the circuit impedance at selected frequencies. The circuit with distributed frequency dependant structures, which allows the performing of measurements based on which the temperature can be calculated in places, where the individual temperature dependant resistive elements are located, is calculated based on an set of equations, which represent the circuit impedance under direct current conditions and the circuit impedance at selected frequencies. The circuit with frequency dependant structures, which provides the performance of measurements in places, where the individual temperature resistive elements are located, is laid out in four configurations, which implement the required temperature-frequency features. The basic circuit of the sensor structure consists of at least two temperature dependant resistive elements and at least one condenser.

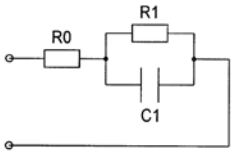

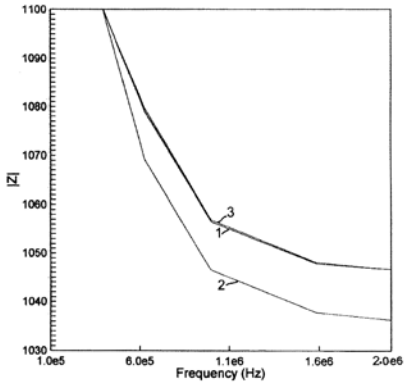

Electronics, IT and Telecommunications

Electronics, IT and telecoms, Measurements and standards

Other electronics related, Energy

https://worldwide.espacenet.com/patent/search/family/027656682/publication/SI21109A?q=si21109

2000

Process and Device for Detecting MAMSK Signal by Remodulation

SI20786A

30. 10. 2000

Jožef Stefan Institute [SI]

Tomaž Javornik, Gorazd Kandus

Postopek in naprava za detekcijo MAMSK signala s pomočjo remodulacije [SL], Process and Device for Detecting MAMSK Signal by Remodulation [EN]

The subject of the introduced invention is a procedure and device for detecting MAMSK signal with the help of remodulation of the MSK component by an increased amplitude. The device simply and effectively detects the MAMSK signal by phase without knowing the phase of the frequency carrier of the MAMSK signal. The described receiver requires only a 1 dB greater signal/noise ratio compared to an optimum receiver, in order to attain the equal probability of byte error when receiving the MAMSK signal.

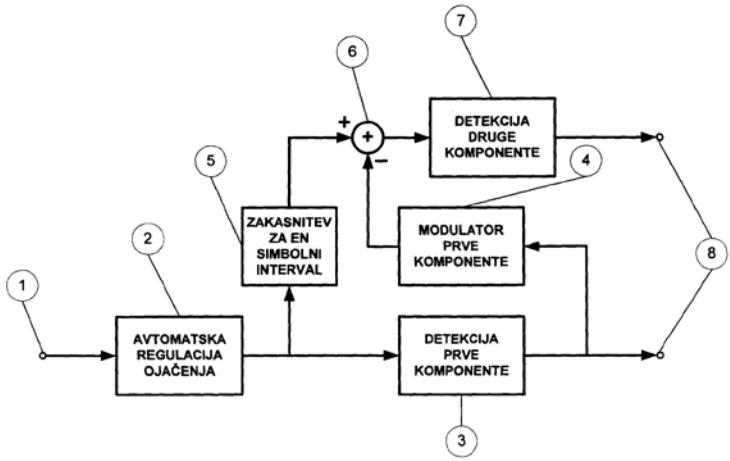

Electronics, IT and Telecommunications

Electronics, IT and telecoms, Measurements and standards

Computer related

https://worldwide.espacenet.com/patent/search/family/020432752/publication/SI20786A?q=si20786

UIL RS

3D Sensitive Board

SI20774A

20. 11. 2000

Branislav Popović [SI], Janez Stare [SI]

Franc Novak, Branislav Popović, Karel Rankel, Janez Stare

3D senzitivna ploščica [SL], 3D Sensitive Board [EN]

The subject of the invention is a 3D sensitive board as en element of a universal controller for devices controlled by a video control loop. It is used for 3D entering of data. The 3D sensitive board can sense the place of contact and the applied pressure to the media in three coordinates. The universal controller including a 3D sensitive board according to the invention integrates and enhances the functions of a conventional keyboard, pointing device (e.g. mouse), graphical panels and TV remote controllers as well as remote controllers for manipulating devices or roboters as input or entering devices for computers. The basis of the device is a basic sensitive board (1) with scanning sensors (7, 8, 9) and a controller (6). The scanning sensors (7, 8, 9) are located between the basic sensitive board (1) and the base (63). The device senses and recognises the media contact location and the pressure force thus providing the execution of various activities on the basic sensitive board (1): motion commands, 3D positioning, typing, freehand drawing and stenography. At the same time it provides return information via a shuttle (5) on the screen (3).

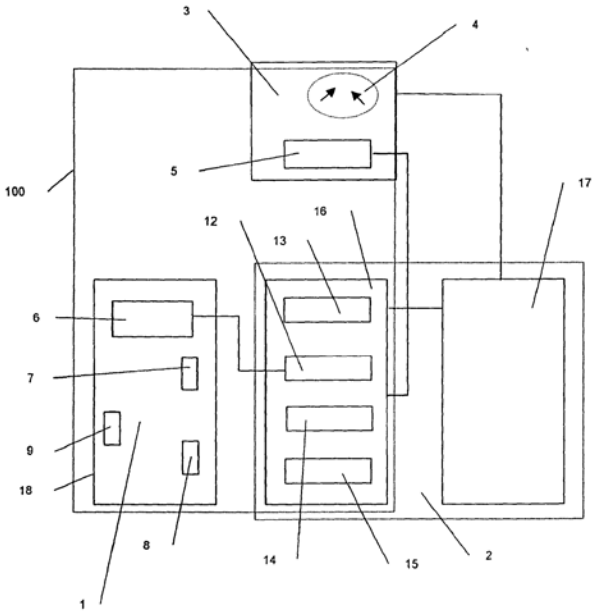

Electronics, IT and Telecommunications

Electronics, IT and telecoms

Communications, Computer related

https://worldwide.espacenet.com/patent/search/family/020432768/publication/SI20774A?q=pn%3DSI20774A

UIL RS

Extended patent application

WO0241129A2

15. 11. 2001

Aventec Handels-, Produktions- Und Beratungsgesellschaft Mbh [AT], Franc Novak [SI], Branislav Popović [SI], Karel Rankel [SI], Janez Stare [SI]

Branislav Popović, Franc Novak, Janez Stare, Karel Rankel

3D Sensitive Plate

https://worldwide.espacenet.com/patent/search/family/020432768/publication/WO0241129A2?q=pn%3DWO0241129A3

Extended patent application

AU2070902A

15. 11. 2001

Aventec Handels-, Produktions- Und Beratungsgesellschaft Mbh [AT]

Branislav Popović, Franc Novak, Janez Stare, Karel Rankel

3D Sensitive Plate

https://worldwide.espacenet.com/patent/search/family/020432768/publication/AU2070902A?q=pn%3DAU2070902A

1999

Procedure and Device for Measuring Elements of Movement and Force Dynamics, Which Affect Individual Particles in the Natural Environment, Particularly in Sandbanks of Running Waters

SI20404A2

27. 9. 1999

University of Ljubljana [SI]

Matjaž Mikoš, Janko Petrovčič, Mojca Spazzapan Escorza

Postopek in naprava za merjenje elementov dinamike gibanja in sil, ki delujejo na posamezne delce v naravnem okolju, zlasti v prodnatih plavinah v vodotokih [SL], Procedure and Device for Measuring Elements of Movement and Force Dynamics, Which Affect Individual Particles in the Natural Environment, Particularly in Sandbanks of Running Waters [EN]

The invention relates to the procedure and device for measuring elements of movement and force dynamics which affect individual particles in the natural environment, particularly in sandbanks of running waters based on the fact that the accelerations, which are produced on the external shell of the measuring device according to this invention are measured and recorded. The accelerations are the consequence of spreading elastic waves from the area of operation of the friction and collision forces on the external shell of the device. Such accelerations of any direction are measured and recorded at least in one projection area with the help of sensors and electronics contained inside the device.

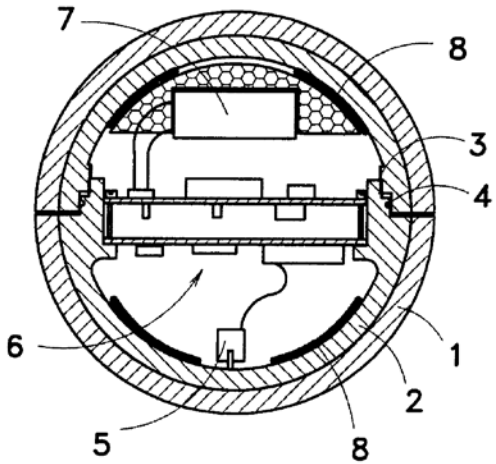

Electronics, IT and Telecommunications

Physical and exact sciences, Measurements and standards

Industrial products

https://worldwide.espacenet.com/patent/search/family/020432537/publication/SI20404A2?q=pn%3DSI20404A2

UIL RS

Nanotechnology and New Materials

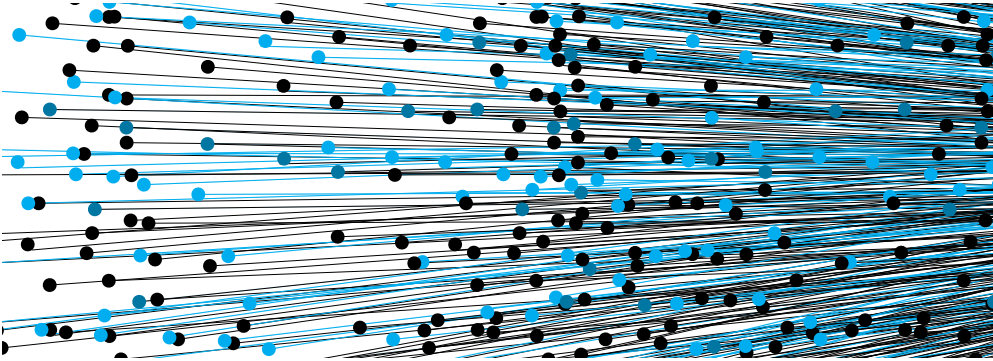

2018

A Method for Recovery of Nd2Fe14B Grains from Bulk Sintered Nd-Fe-B Magnets and / or Magnet Scraps by Electrochemical Etching

EP3660174A1

27. 11. 2018

Jožef Stefan Institute [SI]

Xuan Xu, Sašo Šturm, Kristina Žužek Rožman

A Method for Recovery of Nd2Fe14B Grains from Bulk Sintered Nd-Fe-B Magnets and / or Magnet Scraps by Electrochemical Etching

The invention relates to a method for recovery of Nd2Fe14B grains from bulk sintered Nd-Fe-B magnets and / or magnet scraps. In this method the Nd-Fe-B magnets (1) and / or magnet scraps are anodically oxidized using a non-aqueous liquid electrolyte (5), said anodic oxidation releasing the Nd2Fe14B grains (6) in said Nd-Fe-B magnets (1) and/or magnet scraps. The released Nd2Fe14B grains (6) are collected during and/or after said anodic oxidation. The proposed method allows a more environmental friendly and cost-effective way for recycling EOL Nd-Fe-B magnets / Nd-Fe-B magnet scraps.

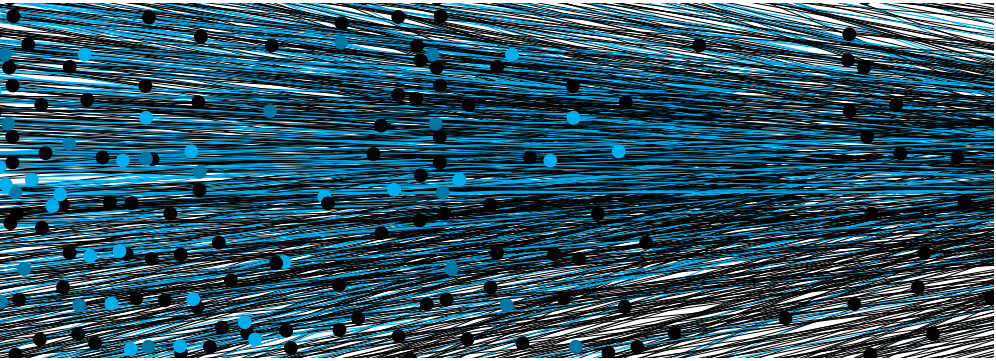

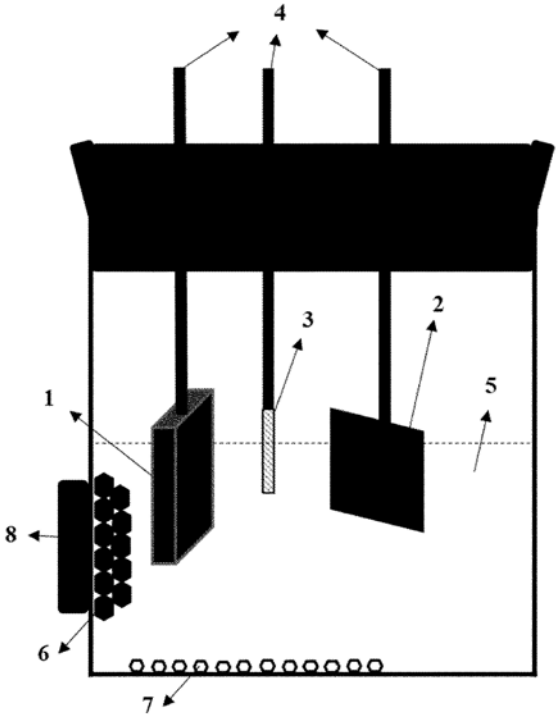

Nanotechnology and New Materials

Industrial manufacturing, material and transport, Other industrial technologies, Physical and exact sciences,

Industrial products, Other

https://worldwide.espacenet.com/patent/search/family/064500217/publication/EP3660174A1?q=EP3660174A1

EPO

Extended patent application

CN111223657A

17. 11. 2019

Jožef Stefan Institute [SI]

Sašo Šturm, Xuan Xu, Kristina Žužek Rožman

A Method for Recovery of Nd2Fe14B Grains from Bulk Sintered Nd-Fe-B Magnets And / Or Magnet Scraps by Electrochemical Etching

https://worldwide.espacenet.com/patent/search/family/064500217/publication/CN111223657A?q=EP3660174A1

Extended patent application

JP2020084331A

4. 6. 2020

Jožef Stefan Institute [SI]

Sašo Šturm, Xuan Xu, Kristina Žužek Rožman

A Method for Recovery of Nd2Fe14B Grains from Bulk Sintered Nd-Fe-B Magnets And / Or Magnet Scraps by Electrochemical Etching

https://worldwide.espacenet.com/patent/search/family/064500217/publication/CN111223657A?q=EP3660174A1

Extended patent application

US2020168395A1

19. 11. 2019

Jožef Stefan Institute [SI]

Sašo Šturm, Xuan Xu, Kristina Žužek Rožman

Method for Recovery of Nd2Fe14B Grains from Bulk Sintered Nd-Fe-B Magnets And / Or Magnet Scraps by Electrochemical Etching

https://worldwide.espacenet.com/patent/search/family/064500217/publication/US2020168395A1?q=EP3660174A1

Method for Treatment Medical Devices Made from Nickel - Titanium (NiTi) Alloys

EP3636294A1

8. 10. 2018

Jožef Stefan Institute [SI]

Metka Benčina, Ita Junkar, Miran Mozetič, Rok Zaplotnik

Method for Treatment Medical Devices Made from Nickel - Titanium (NiTi) Alloys

The present invention improves the surface modification of NiTi alloys used for instance in medical devices through treatment with hydrogen particles in a suitable gaseous discharge and with oxygen atoms. The technique according to the present invention provides the formation of biocompatible solely titanium oxide layer thus preventing nickel to be present in the top surface layer. Furthermore this enables nanostructuring of the surface which depends on the treatment conditions. Devices made from NiTi alloys treated with the method according to the present invention have improved biocompatibility; platelets do not readily attach and activate on such surfaces and the thrombus formation rate is reduced in comparison with extensively used untreated NiTi alloys.

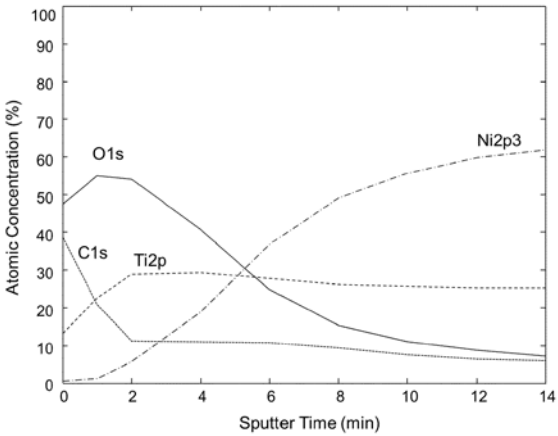

Nanotechnology and New Materials

Industrial manufacturing, material and transport, Biological sciences

Medical / health related, Computer related

https://worldwide.espacenet.com/patent/search/family/063798852/publication/EP3636294A1?q=EP3636294A1

EPO

Extended patent application

US2020109469A1

7. 10. 2019

Jožef Stefan Institute [SI]

Metka Benčina, Ita Junkar, Miran Mozetič, Rok Zaplotnik

Method for Treatment Medical Devices Made from Nickel - Titanium (NiTi) Alloys

https://worldwide.espacenet.com/patent/search/family/063798852/publication/US2020109469A1?q=US2020109469A1

Carbon Nanostructured Materials and Methods for Forming Carbon Nanostructured Materials

WO2019238206A1

11. 6. 2018

Jožef Stefan Institute [SI], National University Corporation Nagoya University [JP]

Masaru Hori, Miran Mozetič, Gregor Primc, Alenka Vesel, Rok Zaplotnik

Carbon Nanostructured Materials and Methods for Forming Carbon Nanostructured Materials

The present invention relates to methods for depositing vertically oriented carbon nanowalls (CNWs) using non-equilibrium gases such as gaseous plasma. Methods are disclosed for rapid deposition of uniformly distributed nanowalls on large surfaces of substrates using ablation of bulk carbon materials by reactive gaseous species, formation of oxidized carbon-containing gaseous molecules, ionization of said molecules and interacting said molecules, neutral or positively charged, with a substrate. The CNWs prepared are useful in different applications such as fuel cells, lithium ion batteries, photovoltaic devices and sensors of specific gaseous molecules.

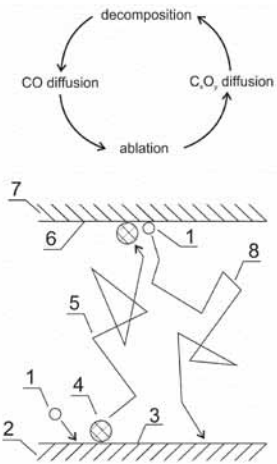

Nanotechnology and New Materials

Energy, Physical and exact sciences

Energy, Industrial products

https://worldwide.espacenet.com/patent/search/family/062683180/publication/WO2019238206A1?q=WO2019238206A1

WIPO

Extended patent application

SI25662A

2. 10. 2018

Jožef Stefan Institute [SI]

Masaru Hori, Miran Mozetič, Gregor Primc, Alenka Vesel, Rok Zaplotnik

Ogljikovi nanostrukturni materiali in metode za sintezo teh materialov

https://worldwide.espacenet.com/patent/search/family/062683180/publication/SI25662A?q=SI25662A

2017

Electro-conductive Reinforced Engineering Ceramics and Preparation Therefore

WO2018083268A1

3. 11. 2017

Consejo Superior de Investigaciones Cientificas [ES], Jožef Stefan Institute [SI]

Andraž Kocjan, Eduardo Ruiz Hitzky, Bernd Wicklein

Electro-conductive Reinforced Engineering Ceramics and Preparation Therefore

This invention relates to a method of preparing a ceramic article which comprises mixing a ceramic powder and a nano-filler in water to form an aqueous suspension; drying said aqueous suspension to obtain a composite powder; forming said composite powder into a green body; and sintering said green body to form said ceramic article, wherein said nano-filler is an insoluble cellulose material. It also relates to methods of making composite powders and green bodies, as well as certain ceramic articles, powders and bodies themselves.

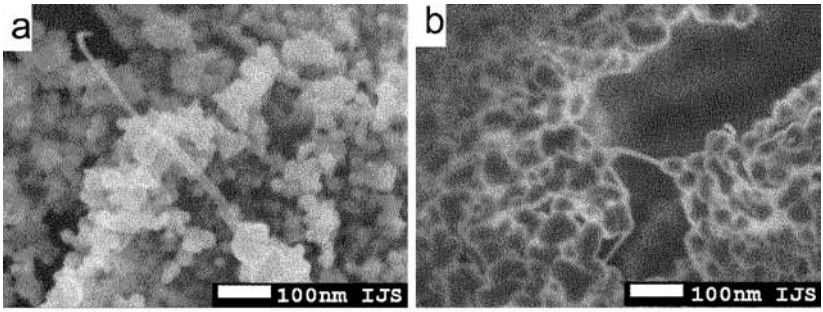

Figure 1

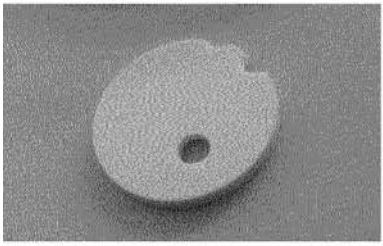

Figure 2

Nanotechnology and New Materials

Industrial manufacturing, material and transport

Industrial products, Other electronics related

https://worldwide.espacenet.com/patent/search/family/060245106/publication/WO2018083268A1?q=WO2018083268A1

WIPO

Method for Coating a Medical Device, Especially a Vascular Stent

EP3496776A1

8. 8. 2017

Jožef Stefan Institute [SI], University of Ljubljana [SI]

Mukta Kulkarni, Ita Junkar, Janez Kovač, Aleš Iglič, Miran Mozetič

Method for Coating a Medical Device, Especially a Vascular Stent

The present invention refers to a method for producing desired morphology of a nanotubular matrix, in particular titanium dioxide containing matrix, which reduces adhesion and activation of platelets on medical devices. Surfaces produced by the method of invention can be used for blood contacting devices, such as stents and artificial heart valves in order to reduce thrombus reactions on the implant material surface.

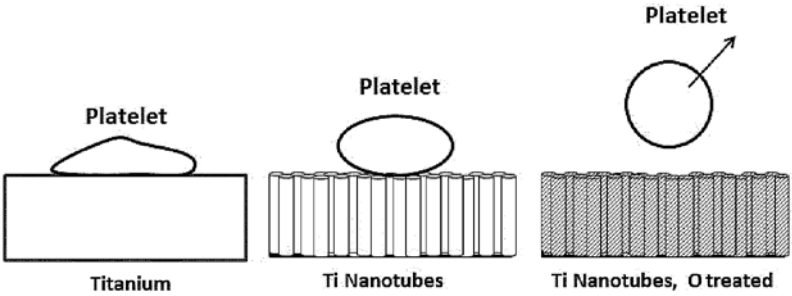

Nanotechnology and New Materials

Physical and exact sciences, Biological sciences

Medical / health related

https://worldwide.espacenet.com/publicationDetails/biblio?FT=D&date=20180215&DB=&locale=en_EP&CC=WO&NR=2018029166A1&KC=A1&ND=4

DE

Extended patent application

WO2017EP70007

8. 8. 2017

Jožef Stefan Institute [SI], University of Ljubljana [SI]

Mukta Kulkarni, Ita Junkar, Aleš Iglič, Janez Kovač, Miran Mozetič

Method for coating a medical device, especially a vascular stent

https://patentscope.wipo.int/search/en/detail.jsf?docId=WO2018029166

A Coating for Improved Tissue Adhesion

WO2017158238

15. 3. 2017

ID CREATIONS OY [FI]

Ilkka Kangasniemi, J. Pablo Perez, Nataša Drnovšek, Martina Lorenzetti

A Coating for Improved Tissue Adhesion

The invention relates to a coating consisting essentially of titanium dioxide wherein at least 20 % of the titanium dioxide has a crystalline structure of anatase and/or rutile; the coating has a roughness comprising indentations, wherein at least 50 % of the indentations have a maximum depth of 1-50 nm and a maximum width of 1-50 nm; the coating is treatable to achieve a water contact angle of 0-20°; the coating is treatable to be negatively charged or positively charged; and the coating exhibits an

improved attachment of mammalian tissue cells, which improved attachment is such that when a substrate coated with the above coating is compared to the same uncoated substrate, at least 100 % more cells remain attached on the coated substrate than on the uncoated substrate.

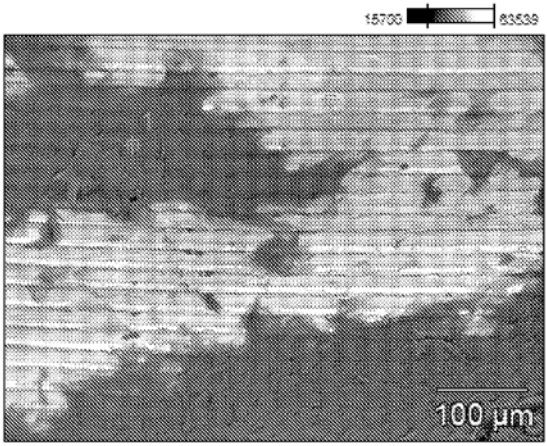

Nanotechnology and New Materials

Biological sciences

Medical / health related

https://worldwide.espacenet.com/publicationDetails/biblio?FT=D&date=20170921&DB=&locale=en_EP&CC=WO&NR=2017158238A1&KC=A1&ND=4

FI

Extended patent application

EP3429650A1

15. 3. 2017

ID CREATIONS OY [FI]

Ilkka Kangasniemi, J. Pablo Perez, Nataša Drnovšek, Martina Lorenzetti

A Coating for Improved Tissue Adhesion

Extended patent application

US2019151503A1

15. 3. 2017

ID CREATIONS OY [FI]

Ilkka Kangasniemi, J. Pablo Perez, Nataša Drnovšek, Martina Lorenzetti

A Coating for Improved Tissue Adhesion

Extended patent application

JP2019511346A

15. 3. 2017

ID CREATIONS OY [FI]

Ilkka Kangasniemi, J. Pablo Perez, Nataša Drnovšek, Martina Lorenzetti

A Coating for Improved Tissue Adhesion

Bi, Pr and V-free Novel ZnO Voltage-sensitive Ceramic Material and Preparation Method Thereof

CN106747404A

22. 1. 2017

Jožef Stefan Institute [SI], Shanghai institute of ceramics [CN], Chinese academy of sciences [CN]

Li Guorong, Slavko Bernik, Tian Tian, Matejka Podlogar, Zheng Xuanying, Cheng Lihong, Zeng Jiangtao, Ruan Xuezheng

Bi, Pr and V-free Novel ZnO Voltage-sensitive Ceramic Material and Preparation Method Thereof

The invention relates to a Bi, Pr and V-free novel ZnO voltage-sensitive ceramic material and a preparation method thereof. The ZnO voltage-sensitive ceramic material is composed of zinc oxide and a modified additive, wherein the content of zinc oxide is 86.5-99.7mol%, and the content of the modified additive is 0.3-13.5mol%; the modified additive comprises 0.1-10mol% of CaCO3, 0.1-1.5mol% of Co2O3, 0.1-1mol% of Cr2O3 and 0-1mol% of La2O3. The voltage-sensitive voltage of the novel ZnO voltage-

sensitive ceramic material is 360-700V/mm, the nonlinear coefficient (I-V nonlinear coefficient) alpha is greater than or equal to 18, the leak current IL is less than or equal to 1mA, and the comprehensive property is excellent. The material is equivalent to that of existing Bi-containing zinc oxide voltage-sensitive ceramic industrially produced in property.

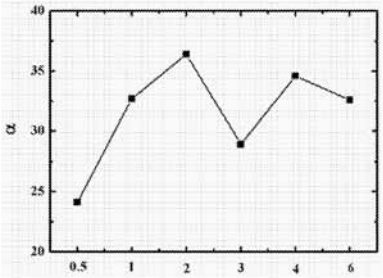

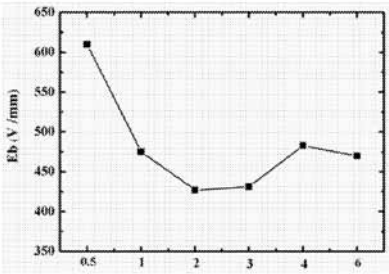

Nanotechnology and New Materials

Electronics, IT and telecoms

Computer related, Other electronics related

https://worldwide.espacenet.com/patent/search/family/058942503/publication/CN106747404A?q=birdroga

CN

2016

Methods for Obtaining Salts of Silver(II) and Hydrates Thereof, Products Obtained by the Methods and Use of the Same

WO2017042624A1

12. 9. 2016

University of Warsaw [PL]

Wojciech Marek Adamczyk, Adam Krzysztof Budniak, Jakub Henryk Gawrackzynski, Tomasz Edward Gilewski, Wojciech Rafal Grochala, Rafal Robert Jurczakowski, Piotr Leszczynski, Zoran Mazej, Piotr Polyczynski

Methods for Obtaining Salts of Silver(II) and Hydrates Thereof, Products Obtained by the Methods and Use of the Same

The present invention relates to process of the electrochemical synthesis of the silver(II) salts of high purity, the methods of synthesis of silver(II) hydrates of high purity, products produced by these methods, and the use of so obtained silver(II) compounds to modify the molecular structures of organic compounds including waste disposal. A method of electrochemical synthesis of a silver(II) salts with the electrolysis of the silver(I) salts or hydrogensalts of silver(I) in the acid solution containing the same anion as electrolyzed salt, preferably oxoanion or oxofluoroanion with inorganic element in a high degree of oxidation. Use of concentrated acid solution, preferably at a concentration of above 80%. The invention includes silver(II) salts obtained by this method. Process of the synthesis of silver(II) salts hydrates with expose of silver(II) or silver(I/If) salts to liquid water, ice or water vapour, under strictly controlled conditions. Preferably, the gas solution with a concentration of water vapor 0-100 g/m 3, for 1-200 hours. The invention includes silver(II) salts hydrates obtained by this method. A method of modifying the molecular structures of organic compounds using an oxidising agent is based in on the oxidative initiation of a reagent with a redox compound, using at least one of silver(II) compound. The invention comprises the use of a silver(II) salt. The invention comprises the use of a silver(II) salt as the redox reagent for disposal of hazardous waste and/or toxic substances, particularly organic.

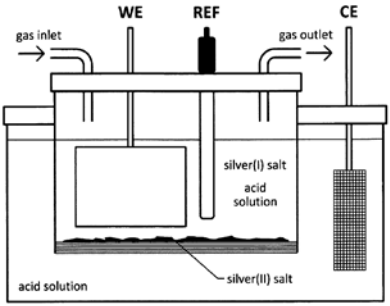

Nanotechnology and New Materials

Other industrial technologies, Protecting man and environment

Medical / health related, Industrial products

https://worldwide.espacenet.com/patent/search/family/057281247/publication/WO2017042624A1?q=WO2017042624A1%20

WIPO

Extended patent application

CA2998293A1

12. 9. 2016

University of Warsaw [PL]

Wojciech Marek Adamczyk, Adam Krzysztof Budniak, Jakub Henryk Gawrackzynski, Tomasz Edward Gilewski, Wojciech Rafal Grochala, Rafal Robert Jurczakowski, Piotr Leszczynski, Zoran Mazej, Piotr Polyczynski

Methods for Obtaining Salts of Silver(II) and Hydrates Thereof, Products Obtained by the Methods and Use of the Same

https://worldwide.espacenet.com/patent/search/family/057281247/publication/CA2998293A1?q=pn%3DCA2998293A1

Extended patent application

EP3347309A1

12. 9. 2016

University of Warsaw [PL]

Wojciech Marek Adamczyk, Adam Krzysztof Budniak, Jakub Henryk Gawrackzynski, Tomasz Edward Gilewski, Wojciech Rafal Grochala, Rafal Robert Jurczakowski, Piotr Leszczynski, Zoran Mazej, Piotr Polyczynski

Methods for Obtaining Salts of Silver(II) and Hydrates Thereof, Products Obtained by the Methods and Use of the Same

https://worldwide.espacenet.com/patent/search/family/057281247/publication/EP3347309A1?q=pn%3DEP3347309A1

Method for Modification of Organic Compound Particles Structure, Reactants Used in This Method and Products Obtained by This Method

PL418630A1

9. 9. 2016

Jožef Stefan Institute [SI], University of Warsaw [PL]

Wojciech Adamczyk, Jakub Gawraczyński; Tomasz Gilewski, Wojciech Grochala, Rafał Jurczakowski, Piotr Leszczyński, Zoran Mazej, Piotr Połczyński

Method for Modification of Organic Compound Particles Structure, Reactants Used in This Method and Products Obtained by This Method

The subject of the application is a method of modifying the structure of organic molecules that allows them to be processed in a simple one-pot synthesis (i.e. one-step, direct synthesis). The application also includes a method of modifying the molecular structure of organic compounds using an oxidizing agent and occurring in a liquid environment, especially organic, which is characterized by the fact that a redox reagent containing at least one silver (II) compound is used as the oxidative initiation factor. The method allows isomerization, dehydrogenation, cracking and / or coupling of organic molecules, and these processes are selective, parallel

and / or sequential. Reactions are carried out without the need for prior functionalization, processing or activation of organic compounds, while maintaining functional groups. The subject of the application are also redox reagents containing silver (II) salts used as oxidative initiators of these processes.
The invention includes the use of silver (II) salts as redox reagents in the modification reactions of organic compound molecular structure compounds and the use of silver (II) salts as redox reagents for the utilization of hazardous, waste and / or toxic organic substances. The application also contains the use of silver (II) salts as redox reagents in organic synthesis, opening previously unknown possibilities for the synthesis and transformation of organic compounds at room temperature.

/

Nanotechnology and New Materials

Other industrial technologies

Other

https://worldwide.espacenet.com/patent/search/family/061534618/publication/PL418630A1?q=PL418630A1

PL

A Vibration System and a Filtering Plate for Filtering Substances

WO2017194999A1

13. 5. 2016

Acondicionamiento Tarrasense [ES], Jožef Stefan Institute [SI]

Danjela Kuščer Hrovatin, Darko Belavič, Tadej Rojac, Mirko Faccini, Diego Morillo Martín, David Amantia

A Vibration System and a Filtering Plate for Filtering Substances

The present invention relates to the vibration system comprising: a filter plate (10) made of a ceramic porous material, said filter plate (10) comprising two sides an upper side and a lower side, and one or more vibration actuators (11) physically coupled to said filter plate (10) and driven, through electrical interconnections (21) and electrodes (23, 24),

with a driving voltage to vibrate said filter plate (10) at a given frequency comprised in a range between 100 Hz and 100 kHz and to provide a displacement in a plane of said filter plate (10) with an amplitude between 0.01 and 2 μm, wherein said filter plate (10) and said one or more vibration actuators (11) being assembled in a housing (13) with clamping means (14), a periphery of the housing (13) delimiting a filtering area (15), and said one or more vibration actuators (11) being located in or nearby said filtering area (15).

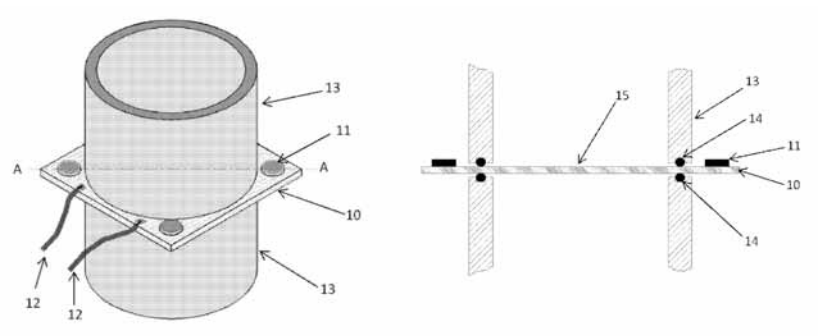

Nanotechnology and New Materials

Electronics, IT and telecoms, Physical and exact sciences

Communications, Computer related, Other electronics related

https://worldwide.espacenet.com/patent/search/family/056119709/publication/WO2017194999A1?q=WO2017194999

WIPO

Extended patent application

EP3454977A1

13. 5. 2016

Acondicionamiento Tarrasense [ES], Jožef Stefan Institute [SI]

Danjela Kuščer Hrovatin, Darko Belavič, Tadej Rojac, Mirko Faccini, Diego Morillo Martín, David Amantia

A vibration system and a filtering plate for filtering substances

https://worldwide.espacenet.com/patent/search/family/056119709/publication/EP3454977A1?q=WO2017194999

Electro-optical Modulator Based on a Layered Semiconductor Crystal Structure

GB2546265A

12. 1. 2016

Jožef Stefan Institute [SI], Fondazione Istituto Italiano di Tecnologia [IT]

Christoph Gadermaier, Daniele Vella, Andras Kis, Dmitry Ovchinnikov, Guglielmo Lanzani, Nicola Martino, Maria Rosa Antognazza

Electro-optical Modulator Based on a Layered Semiconductor Crystal Structure

The invention provides an electro-optical modulator having: a mono-or multi-layered film of 2-dimensional semiconducting material having a layered crystal structure; and electrodes formed at each side of the semiconducting material, wherein the application of electrical potential to said electrodes and across said semiconducting material modulates the transmittance of light of certain wavelengths as a function of the voltage. Integrated photonic circuits and optical devices having such modulators are also provided.

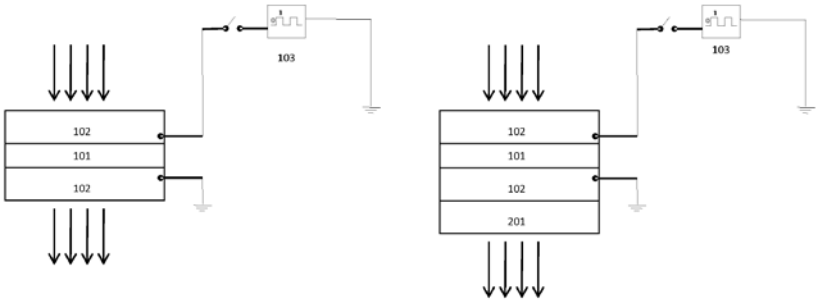

Nanotechnology and New Materials

Electronics, IT and telecoms, Physical and exact sciences

Communications, Computer related, Other Electronics related

https://worldwide.espacenet.com/patent/search/family/055445905/publication/GB2546265A?q=GB2546265A

GB

Extended patent application

WO2017121608A1

22. 12. 2016

Jožef Stefan Institute [SI], Fondazione Istituto Italiano di Tecnologia [IT]

Christoph Gadermaier, Daniele Vella, Andras Kis, Dmitry Ovchinnikov, Guglielmo Lanzani, Nicola Martino, Maria Rosa Antognazza

Electro-optical Modulator Based on a Layered Semiconductor Crystal Structure

https://worldwide.espacenet.com/patent/search/family/055445905/publication/WO2017121608A1?q=GB2546265A

2015

Method of Growing Carbon Nanowalls on a Substrate

EP3206728A1

13. 10. 2015

Jožef Stefan Institute [SI], University of Maribor [SI]

Ita Junkar, Martina Modic, Alenka Vesel, Gheorghe Dinescu, Sorin Ionut Vizireanu, Silviu-Daniel Stoica, Karin Stana Kleinschek, Miran Mozetič

Method of Growing Carbon Nanowalls on a Substrate

The present invention refers to a method for growing carbon nanowalls on a substrate of an implantable medical device by means of a processing chamber, said method comprising: providing said substrate in said processing chamber, evacuating said processing chamber to a processing pressure, entering a gas mixture inside the processing chamber, providing radicals inside said chamber and adsorbing said radicals on said substrate leading to growing of carbon nanowalls on said substrate.

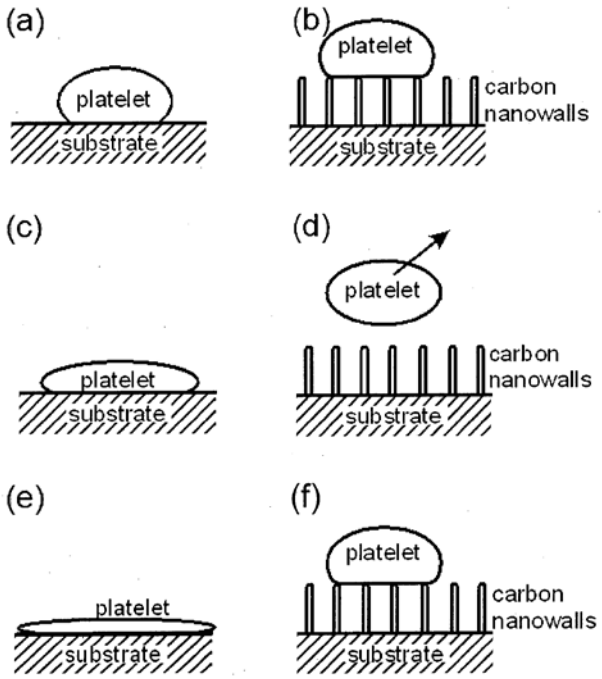

Nanotechnology and New Materials

Physical and exact sciences

Medical / health related

https://worldwide.espacenet.com/patent/search/family/052001306/publication/EP3206728A1?q=EP3206728A1

EPO

Extended patent application

WO2016059024A1

13. 10. 2015

Jožef Stefan Institute [SI], University of Maribor [SI]

Ita Junkar, Martina Modic, Alenka Vesel, Miran Mozetič, Gheorghe Dinescu, Sorin Ionut Vizireanu, Silviu-Daniel Stoica, Karin Stana Kleinschek

Method of Growing Carbon Nanowalls on a Substrate

https://worldwide.espacenet.com/patent/search/family/052001306/publication/WO2016059024A1?q=EP3206728A1

Method for Immobilization of Heparin on a Polymeric Material

EP2997984B1

17. 9. 2015

Jožef Stefan Institute [SI], University of Maribor [SI]

Metod Kolar, Alenka Vesel, Martina Modic, Ita Junkar, Karin Stana – Kleinschek, Miran Mozetič

Method for Immobilization of Heparin on a Polymeric Material

The present invention refers to a method for immobilization of heparin on polymeric material, said method comprising selecting a substrate made from a polymeric material, pre-treating said substrate, mounting said substrate into a vacuum chamber, evacuating the vacuum chamber to pressure essentially below 100 Pa, preferably below 1 Pa, selecting a source of NH2 radicals, leaking the NH2 radicals from said source into said vacuum chamber during continuous pumping of said vacuum chamber, interacting said NH2 (NH2) radicals with said substrate made from a polymeric material, evacuating said vacuum chamber, venting said vacuum chamber to atmospheric pressure, and covalent bonding of activated heparin on said substrate.

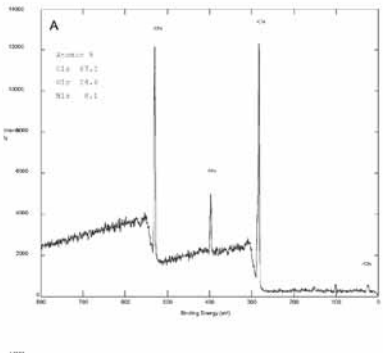

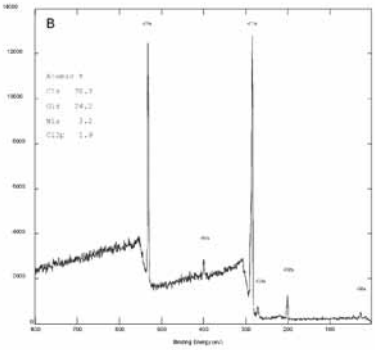

Nanotechnology and New Materials

Physical and exact sciences, Measurements and standards

Medical / health related, Industrial products

https://worldwide.espacenet.com/patent/search/family/051869176/publication/EP2997984B1?q=EP2997984

EPO

Method for Coupling Molecules of Organic Compounds

PL413922A1

11. 9. 2015

University of Warsaw [PL], Jožef Stefan Institute [SI]* * *

Piotr Leszczynski, Wojciech Grochala, Adam Budniak, Zoran Mazej

Method for Coupling Molecules of Organic Compounds

The present invention relates to process of the electrochemical synthesis of the silver(II) salts of high purity, the methods of synthesis of silver(II) hydrates of high purity, products produced by these methods, and the use of so obtained silver(II) compounds to modify the molecular structures of organic compounds including waste disposal. A method of electrochemical synthesis of a silver(II) salts with the electrolysis of the silver(I) salts or hydrogensalts of silver(I) in the acid solution containing the same anion as electrolyzed salt, preferably oxoanion or oxofluoroanion with inorganic element in a high degree of oxidation. Use of concentrated acid solution, preferably at a concentration of above 80%. The invention includes silver(II) salts obtained by this method. Process of the synthesis of silver(II) salts hydrates with expose of silver(II) or silver(I/If) salts to liquid water, ice or water vapour, under strictly controlled conditions. Preferably, the gas solution with a concentration of water vapor 0-100 g/m 3, for 1-200 hours. The invention includes silver(II) salts hydrates obtained by this method. A method of modifying the molecular structures of organic compounds using an oxidising agent is based in on the oxidative initiation of a reagent with a redox compound, using at least one of silver(II) compound. The invention comprises the use of a silver(II) salt. The invention comprises the use of a silver(II) salt as the redox reagent for disposal of hazardous waste and/or toxic substances, particularly organic.

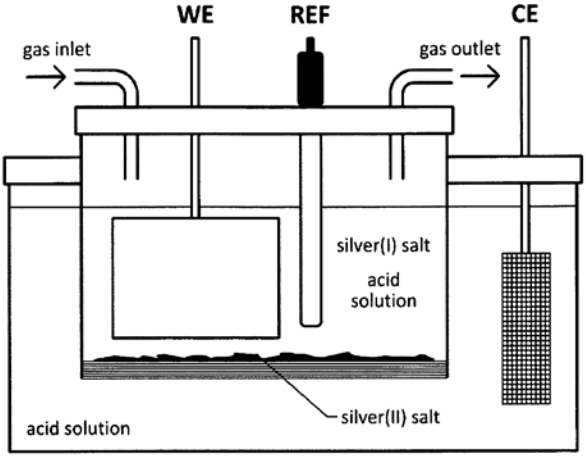

Nanotechnology and New Materials

Industrial manufacturing, material and transport

Energy, Industrial products, Medical / health related

https://patentscope.wipo.int/search/en/detail.jsf?docId=WO2017042624

PL

*** The head of the research department (Department of Inorganic Chemistry and Technology) confirmed that Jožef Stefan Institute is 20% owner of the patent application. At the moment, procedures are in place to complement the patent databases so that Jožef Stefan Institute will also be officially designated as the applicant.

Extended patent application

WO2017042624A1

13. 9. 2016

University of Warsaw [PL], Jožef Stefan Institute [SI]

Piotr Leszczynski, Adam Krzysztof Budniak, Wojciech Marek Adamczyk, Jakub Henryk Gawrackzynski, Tomasz Edward Gilewski, Piotr Polyczynski, Rafal Robert Jurczakowski, Wojciech Rafal Grochala, Zoran Mazej

Methods for Preparing Silver(II) Salts and Their Hydrates, the Products Obtained by These Methods, and Their Use to Modify the Molecular Structure of Organic Compounds

https://worldwide.espacenet.com/publicationDetails/biblio?FT=D&date=20170316&DB=&locale=en_EP&CC=WO&NR=2017042624A1&KC=A1&ND=4

Method for Treatment of Tools and Tools Used for Isolation of Microvesicles, Nanovesicles or Exosomes

EP3185921B1

25. 8. 2015

Jožef Stefan Institute [SI], University of Ljubljana [SI]

Ita Junkar, Veronika Kralj – Iglič, Rok Zaplotnik, Roman Štukelj, Miran Mozetič

Method for Treatment of Tools and Tools Used for Isolation of Microvesicles, Nanovesicles or Exosomes

The present invention refers to a method which prevents excessive adsorption of microvesicles on the surfaces of tools used for sampling, storing and handling body fluids containing microvesicles. The method comprises the steps of: selecting said a tool from the a list plurality of tools including but not limited to needles, blood tubing, blood bags, catheters, Eppendorf tubes, pipettes or the like, providing said tool from said plurality of tools, providing a source of positively and negatively charged particles of high density, selecting a source assuring for formation of positively and negatively charged particles of high density and treating a surface of said tool by applying short pulses of said source of particles next to or on the said surface of said tool to assure surface modification of said surface by reacting said positively and negatively charged particles of high density on said surface. The method according to the present invention ensures contacting of tools with short pulses of highly ionized gas comprising both positively and negatively charged particles, the pulses being essentially short enough to avoid excessive heating of materials used for collecting, sampling, storage, transport and isolation of micro vesicles and the density of both positively and negatively charged particles which is essentially high enough to cause roughening of said tools on sub-micrometer or na-

nometer scale. Especially tools treated according to the present inventive method prevents excessive adsorption of microvesicles on the surfaces of said tools used for collecting, sampling, storing, transporting and isolating of microvesicles or the like. The method according to the present invention enables higher yields and lower frag- mentation of microvesicles for instance by preventing adsorption of this valuable diag- nostic material on the surface of different tools used for isolation and detection. Accordingly, the present invention also provides increasing the roughness of a material by the method according to the present invention. In particular the material which is used to produce diagnostic or medical tools or devices.

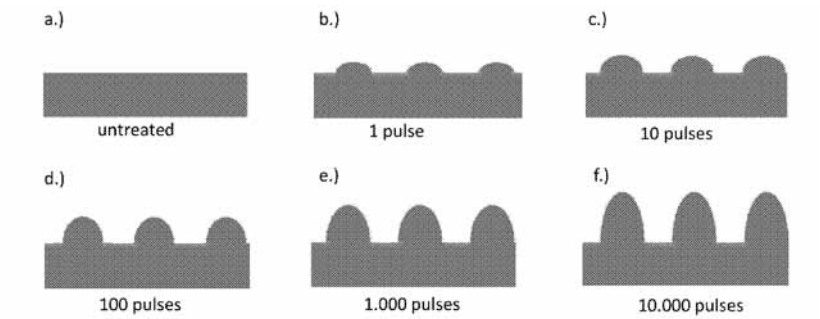

Nanotechnology and New Materials

Physical and exact sciences

Genetic Engineering / Molecular Biology; Medical / Health Related

https://worldwide.espacenet.com/patent/search/family/051727052/publication/EP3185921B1?q=EP3185921B1

EPO

Extended patent application

WO2016030358A1

25. 8. 2015

Jožef Stefan Institute [SI], University of Ljubljana [SI]

Ita Junkar, Veronika Kralj – Iglič, Rok Zaplotnik, Roman Štukelj, Miran Mozetič

Method for treatment of tools and tools used for isolation of microvesicles, nanovesicles or exsomes

https://worldwide.espacenet.com/patent/search/family/051727052/publication/WO2016030358A1?q=EP3185921B1

Process for Manufacturing Cordierite Ceramics Having Controlled and Reproducible Mechanical and Thermal Properties

EP3115347B1

6. 7. 2015

Development center eNeM Novi Materiali d. o. o. [SI]

Ines Bantan, Janez Holc, Danjela Kuščer Hrovatin

Process for Manufacturing Cordierite Ceramics Having Controlled and Reproducible Mechanical and Thermal Properties

The object of the invention is a process for manufacturing cordierite ceramics having controlled and reproducible properties for electrotechnology, metallurgy and heating technology. Cordierite ceramics of the invention belongs to a group of alkaline earth aluminosilicates. To manufacture cordierite ceramics we used the natural materials talc, clay components, feldspar, silicon oxide and as an aluminium oxide source the synthetic compounds corundum, boehmite, aluminium hydroxide or a mixture thereof. After the mixture is ground and the products are formed, the blanks are fired at a temperature in the range from 1270 to 1350 °C for 1 hour to 10 hours. If an aluminium oxide source with a size particle exceeding 2 micrometres is added, cordierite ceramics having mechanical flexural strength of 111 to 115 MPa and thermal expansion coefficient from 3,0 to 3.2 x 10 -6 K -1 in the range from 30 to 600 °C is obtained. If an aluminium oxide source with a size particle below 2 micrometres is added, cordierite ceramics having mechanical flexural strength of 70 to 90 MPa and thermal expansion coefficient from 2.3 to 2.8 x 10-6 K -1 in the range from 30 to 600 °C is obtained.

/

Nanotechnology and New Materials

Industrial manufacturing, material and transport

Industrial products

https://worldwide.espacenet.com/patent/search/family/053541481/publication/EP3115347B1?q=%20EP15002012A

EPO

A Method to Produce Foam Glasses

DK2966044T3

25. 6. 2015

Graasten Teglværk AS [DK]

Jakob König, Rasmus Rosenlund Petersen, Yuanzheng Yue

Fremgangsmåde til fremstilling af skumglas [DK], A Method to Produce Foam Glasses [EN]

The present invention relates to a production process of foam glass from a mixture of glass cullet or slag or fly ash with a foaming agent and an oxidizing agent and heating to below 1100°C under low oxygen atmosphere. The invention relates more particularly to a process wherein pure carbon or a compound which yields pure carbon as the foaming agent is oxidized by a sufficient amount of an efficient oxidizing agent essentially added to the glass-carbon powder mixture, where the oxidizing agent supplies oxygen in the relevant temperature range, to release CO/CO 2 gas mixture in the softened glass at elevated temperature, to form a foamed material with CO 2 gas filled cells.

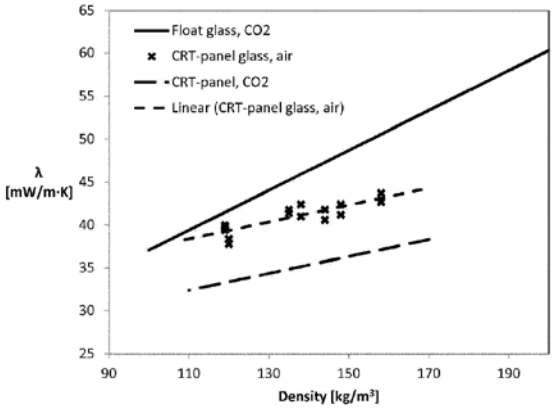

Nanotechnology and New Materials

Industrial manufacturing, material and transport

Industrial products

https://worldwide.espacenet.com/patent/search/family/053498814/publication/DK2966044T3?q=DK2966044T3

EPO

Extended patent application

EP2966044B1

25. 6. 2015

AS Graasten Teglværk [DK]

Jakob König, Rasmus Rosenlund Petersen, Yuanzheng Yue

A Method to Produce Foam Glasses

https://worldwide.espacenet.com/patent/search/family/053498814/publication/EP2966044B1?q=DK2966044T3

Metal-bonded RE-Fe-B Magnets

US20160322136A1

30. 4. 2015

Jožef Stefan Institute [SI]

Luka Kelhar, Paul Mcguinnes, Spomenka Kobe

Metal-bonded RE-Fe-B Magnets

This invention relates to bonded magnets and the method for their production. Such magnets benefit from the fact that for binding, they utilize Low-Melting-Point metal or an alloy, and thus can be used at temperatures where conventional bonded magnets cannot operate. This

composite magnet is made of magnetic phase and non-magnetic metallic binder. The mechanical and magnetic properties of metal-bonded magnets vary with the ratio of the two phases. The optimum result is achieved when adding 20-40 wt. % of binder. A huge difference can be observed between conventional and spark-plasma sintering (SPS) processing. An increase in remanence is up to 30%, as a consequence of simultaneous application of pressure and temperature. Additionally, minimized exposure time contributes to preservation of magnetic properties, which is a strong advantage of SPS technique. The value added of such magnets is the ability to withstand temperatures above 200° C., due to metallic matrix.

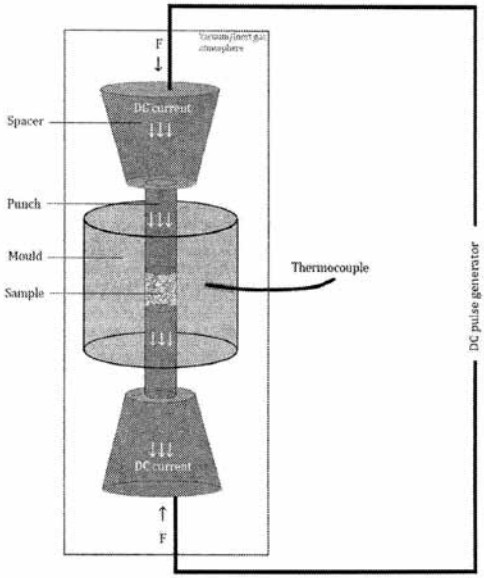

Nanotechnology and New Materials

Physical and exact sciences, Industrial manufacturing, material and transport

Communications, Computer related, Other electronics related

https://worldwide.espacenet.com/publicationDetails/biblio?FT=D&date=20161103&DB=&locale=en_EP&CC=US&NR=2016322136A1&KC=A1&ND=4

US

Process for the Synthesis of the Molybdenum Carbide in the Form of Quasi-one-dimensional Structures, That Is, Nano-wires, Micro-wires, Nano-strips and Micro-strips

SI24925A

27. 2. 2015

Jožef Stefan Institute [SI]

Andrej Kovič, Adolf Jesih, Aleš Mrzel

Postopek za sintezo molibdenovih karbidov v obliki kvazi enodimenzionalnih struktur, to je nanožic, mikrožic, nanotrakov in mikrotrakov [SL], Process for the Synthesis of the Molybdenum Carbide in the Form of Quasi-one-dimensional Structures, That Is, Nano-wires, Micro-wires, Nano-strips and Micro-strips [EN]

The subject of the invention is a process for the synthesis of molybdenum carbides in the form of quasi-one-dimensional structures; This is nanowires, microsounds, nanotubes, and microtractors. The invention is in the field of inorganic chemistry and transition metal chemistry and refers to the synthesis of molybdenum carbides in the form of quasi-one-dimensional structures by the method of converting quasi-one-dimensional compounds with a submicro cross section of the nanoparticles described by the formula Mo6CyHz, 8.2 smaller than y + z less than 10, Mo is molybdenum, C is halogen (sulfur (S), selenium (Se), telur (Te)); H is halogen (iodine (I)), by heating in the presence of a carbon-containing gas. This process allows the synthesis of the macroscopic amount of molybdenum carbides in the form of quasi-one-dimensional structures (nanoscale, microsounds, nanotubes, and microtrains).

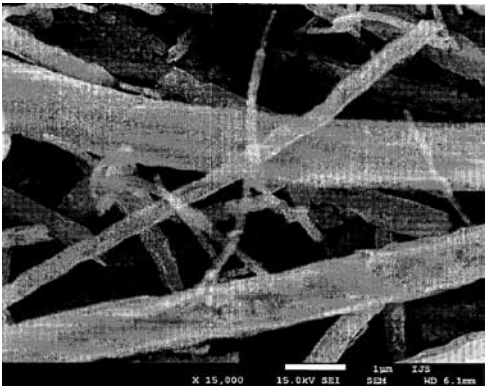

Nanotechnology and New Materials

Physical and exact sciences, Industrial manufacturing, material and transport

Energy, Industrial products

https://worldwide.espacenet.com/publicationDetails/biblio?FT=D&date=20160831&DB=&locale=en_EP&CC=SI&NR=24925A&KC=A&ND=4

UIL RS

2014

Method for Producing Steatite Ceramics of C 221 Type with Improved Electrical Properties

EP3233755B1

15. 12. 2014

Development center eNem novi materiali d. o. o. [SI]

Janez Holc, Danjela Kuščer Hrovatin, Irena Ramsak, Marija Razpotnik

Method for Producing Steatite Ceramics of C 221 Type with Improved Electrical Properties

The object of the invention is a process for producing non-alkaline steatite ceramics having controlled electrical properties for electrotechnology. Non-alkaline steatite ceramics of the invention belongs to a group of magnesium silicates of C C221 type. Steatite ceramics is an electrical insulator with low electrical conductivity at increased temperature, low dielectric constant and small dielectric losses. To produce steatite ceramics the materials talc, kaolin, clays, barium carbonate and calcium oxide and magnesium oxide in the form of hydroxides, carbonates, nitrates or other salts were used. The mixture can contain up to 3 % by weight of iron oxides. After the mixture is ground and the products are formed, the blanks are fired at a temperature in the range from 1280 to 1350 °C for 1 hour to 10 hours. The steatite ceramics without an addition of calcium oxide and magnesium oxide has specific electrical resistance at 400 °C 0.6 x 107 Ohm m. In case when calcium and magnesium oxides are added, the specific electric resistance of the ceramics is 1.4 x 107 Ohm m at 400 °C.

/

Nanotechnology and New Materials

Electronics, IT and telecoms, Energy

Industrial products
Other electronics related

https://worldwide.espacenet.com/patent/search/family/052469271/publication/EP3233755B1?q=EP3233755A1

EPO

Extended patent application

WO2016099405A1

15. 12. 2014

Development center eNem novi materiali d. o. o. [SI]

Janez Holc, Danjela Kuščer Hrovatin, Irena Ramsak, Marija Razpotnik

Method for Producing Steatite Ceramics of C 221 Type with Improved Electrical Properties

https://worldwide.espacenet.com/patent/search/family/052469271/publication/WO2016099405A1?q=EP3233755A1

Steatite Ceramics with Improved Electrical Properties and a Method for the Production Thereof

WO2016093771A1

10.12.2014

Jožef Stefan Institute [SI], Development center ENEM novi materiali d. o. o. [SI]

Irena Ramšak, Marija Razpotnik, Katja Makovšek, Danjela Kuščer Hrovatin, Silvo Drnovšek, Janez Holc

Steatite Ceramics with Improved Electrical Properties and a Method for the Production Thereof

The object of the invention is a process for producing alkaline steatite ceramics having controlled electrical properties for electrotechnology. Alkaline steatite ceramics of the invention belongs to a group of magnesium silicates of C 220 type. Steatite ceramics is an electrical insulator with a relatively low electrical conductivity at increased temperature. To produce the alkaline steatite ceramics the materials talc, kaolin, clays, bentonite and dolomite were used. The mixture can contain up to 1.5 % by weight of iron oxides. After the mixture is ground and the products are formed, the blanks are fired at a temperature in the range from 1280 to 1340 °C for 1 hour to 10 hours. Alkaline steatite ceramics with bentonite without

added kaolin has specific electrical resistance at 400 °C 1.4 x 106 Ohm m. The ceramics, in which the total content of bentonite is replaced by kaolin, has specific electrical resistance at 400 °C more than 1 x 108 Ohm m.

/

Nanotechnology and New Materials

Electronics, IT and telecoms, Industrial manufacturing, material and transport

Communications, Other electronics related, Energy

https://worldwide.espacenet.com/publicationDetails/biblio?FT=D&date=20160616&DB=&locale=en_EP&CC=WO&NR=2016093771A1&KC=A1&ND=4

EPO

Extended patent application

EP3230232B1

10. 12. 2014

Jožef Stefan Institute [SI], Development center ENEM novi materiali d. o. o. [SI]

Irena Ramšak, Marija Razpotnik, Katja Makovšek, Danjela Kuščer Hrovatin, Silvo Drnovšek, Janez Holc

Production Method of Steatite Ceramics with Improved Electrical Properties

https://worldwide.espacenet.com/patent/search/family/052469270/publication/EP3230232B1?q=WO2016093771

Extended patent application

SI3230232T1

10. 12. 2014

Jožef Stefan Institute [SI], Development center ENEM novi materiali d. o. o. [SI]

Irena Ramšak, Marija Razpotnik, Katja Makovšek, Danjela Kuščer Hrovatin, Silvo Drnovšek, Janez Holc

Steatitna keramika z izboljšanimi električnimi lastnostmi in postopek za njeno izdelavo

https://worldwide.espacenet.com/patent/search/family/052469270/publication/SI3230232T1?q=pn%3DWO2016093771A1

Method for Cleaning of with Body Fluid-contaminated Medical Implantants and Devices with the Use of Atomic Oxygen

SI24840A

02. 10. 2014

Jožef Stefan Institute [SI]

Alenka Vesel, Rok Zaplotnik, Miran Mozetič

Metoda za čiščenje s telesno tekočino onesnaženih medicinskih vsadkov in pripomočkov z uporabo atomarnega kisika [SL], Method for Cleaning of with Body Fluid-contaminated Medical Implantants and Devices with the Use of Atomic Oxygen [EN]

The subject of the invention is a method for purification with blood, lymph, blood plasma or any other body fluid of contaminated metal implants made of titanium or titanium alloy. These implants are exposed to atomic oxygen, which reacts chemically with organic material from impurities at room temperature or slightly elevated temperature, partly or completely oxidizes it, and oxidation products can be volatile molecules leaving the surface of said implants during treatment. After the sufficiently large received dose of atomic oxygen, only the oxidized microelements that are initially present in the impurities with which the implants are contaminated remain on the surface of said implants. The method allows complete removal of the organic component without altering the other properties of said implants, since the treatment is carried out at a sufficiently low temperature below 100 degrees Celsius.

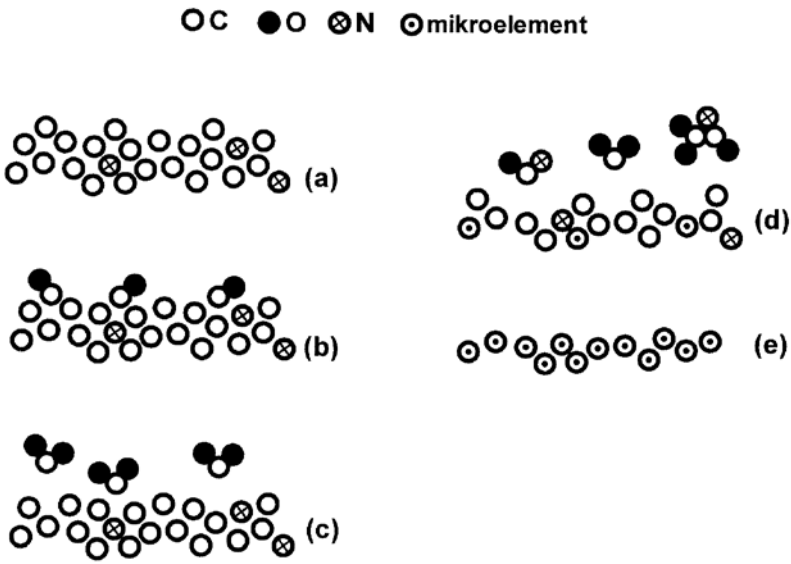

Nanotechnology and New Materials

Physical and exact sciences, Biological sciences

Medical / health related

https://worldwide.espacenet.com/publicationDetails/biblio?FT=D&date=20160429&DB=&locale=en_EP&CC=SI&NR=2484OA&KC=A&ND=4

UIL RS

Photocatalytic Reactor

WO2016034253A1

5. 9. 2014

Jožef Stefan Institute [SI]

Luka Suhadolnik, Matic Krivec, Miran Čeh, Kristina Žagar, Goran Dražič

Photocatalytic Reactor

The invention described herein is a reactor comprising: a housing defining a chamber therein; an inlet channel and an outlet channel running through the housing into the chamber; and a support positioned within the chamber; the support having a surface comprising a semiconductor material. Also described are methods of making reactors, methods of using reactors, and related uses and products.

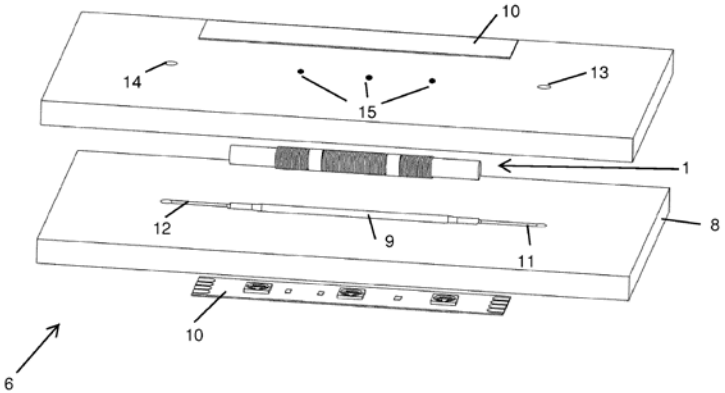

Nanotechnology and New Materials

Industrial manufacturing, material and transport , Physical and exact sciences

Medical / health related products, Industrial products

https://worldwide.espacenet.com/publicationDetails/biblio?FT=D&date=20160310&DB=&locale=en_EP&CC=WO&NR=2016034253A1&KC=A1&ND=4

WIPO

Extended patent application

SI24802A

16. 10. 2014

Jožef Stefan Institute [SI]

Luka Suhadolnik, Matic Krivec, Miran Čeh, Kristina Žagar, Goran Dražič

Reaktor

https://worldwide.espacenet.com/publicationDetails/originalDocument?FT=D&date=20160331&DB=&locale=en_EP&CC=SI&NR=24802A&KC=A&ND=4

Magnet Having Regions of Different Magnetic Properties and Method for Forming Such a Magnet

WO2016023961A1

12. 8. 2014

ABB technology Ag [CH]

Felix Greuter, Jaćim Jaćimović, Erik Johansson, Simon Reinhard, Tomaž Tomše, Darren Tremelling

Magnet Having Regions of Different Magnetic Properties and Method for Forming Such a Magnet

This invention concerns a magnet having a magnet body (10) as well as a method for manufacturing such a magnet. The magnet body (10) has a first region (23) with first magnetic properties and a second region (24) with second magnetic properties that are different to the first properties. Owing to the manufacturing process of the magnet body (10), the relative location of the first region (23) and the second region (24) within the magnet body (10) is freely predeterminable.

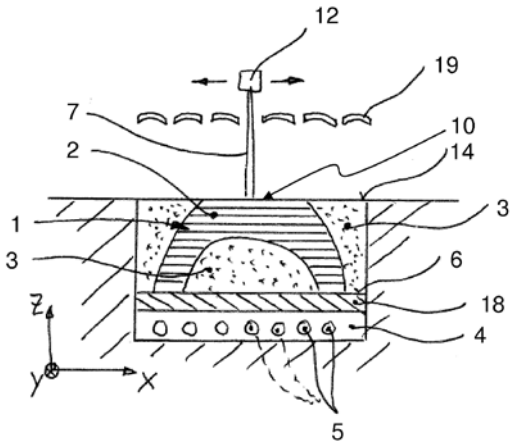

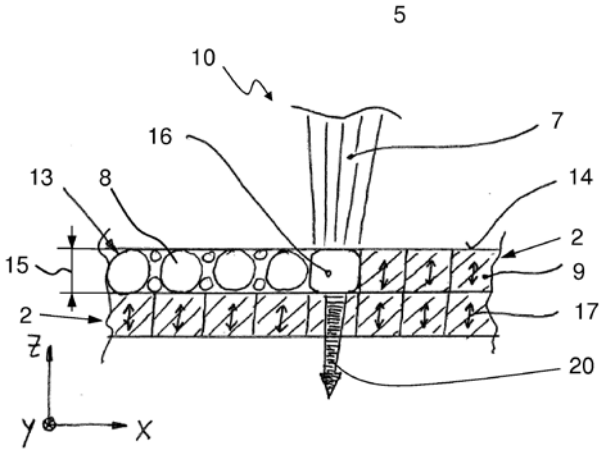

Nanotechnology and New Materials

Industrial manufacturing, material and transport, Other industrial technologies

Industrial products, Other

https://worldwide.espacenet.com/patent/search/family/053801001/publication/WO2016023961A1?q=wo2016023961

WIPO

Extended patent application

CN106796835A

12. 8. 2015

ABB technology Ag [CH]

Felix Greuter, Jaćim Jaćimović, Erik Johansson, Simon Reinhard, Tomaž Tomše, Darren Tremelling

Magnet Having Regions of Different Magnetic Properties and Method for Forming Such a Magnet

https://worldwide.espacenet.com/patent/search/family/053801001/publication/CN106796835A?q=pn%3DCN106796835A

Extended patent application

DK3180141T3

12. 8. 2015

ABB technology Ag [CH]

Felix Greuter, Jaćim Jaćimović, Erik Johansson, Simon Reinhard, Tomaž Tomše, Darren Tremelling

Magnet med områder med forskellige magnetiske egenskaber og fremgangsmåde til dannelse af en sådan magnet [DA]

https://worldwide.espacenet.com/patent/search/family/053801001/publication/DK3180141T3?q=pn%3DDK3180141T3

Extended patent application

EP3180141B1

12. 8. 2015

ABB technology Ag [CH]

Felix Greuter, Jaćim Jaćimović, Erik Johansson, Simon Reinhard, Tomaž Tomše, Darren Tremelling

Magnet Having Regions of Different Magnetic Properties and Method for Forming Such a Magnet

https://worldwide.espacenet.com/patent/search/family/053801001/publication/EP3180141B1?q=wo2016023961

Extended patent application

ES2711852T3

12. 8. 2015

ABB technology Ag [CH]

Felix Greuter, Jaćim Jaćimović, Erik Johansson, Simon Reinhard, Tomaž Tomše, Darren Tremelling

Imán que presenta regiones de diferentes propiedades magnéticas y procedimiento para formar dicho imán

https://worldwide.espacenet.com/patent/search/family/053801001/publication/ES2711852T3?q=pn%3DES2711852T3

Extended patent application

JP2018139305A

6. 9. 2018

ABB technology Ag [CH]

Felix Greuter, Jaćim Jaćimović, Erik Johansson, Simon Reinhard, Tomaž Tomše, Darren Tremelling

Magnet Having Regions of Different Magnetic Properties and Method for Forming Such a Magnet

https://worldwide.espacenet.com/patent/search/family/053801001/publication/JP2017532761A?q=pn%3DJP2017532761A

Extended patent application

US10269479B2

12. 8. 2014

ABB technology Ag [CH]

Felix Greuter, Jaćim Jaćimović, Erik Johansson, Simon Reinhard, Tomaž Tomše, Darren Tremelling

Magnet Having Regions of Different Magnetic Properties and Method for Forming Such a Magnet

https://worldwide.espacenet.com/patent/search/family/053801001/publication/US10269479B2?q=pn%3DUS2017154713A1

Method for Electrocaloric Energy Conversion

WO2015014853A1

29. 7. 2014

Jožef Stefan Institute [SI], University of Ljubljana [SI]

Barbara Malič, Hana Uršič, Marija Kosec, Silvo Drnovšek, Jena Cilenšek, Zdravko Kutnjak, Brigita Rožič, Uroš Flisar, Andrej Kitanovski, Marko Ožbolt, Uroš Plaznik, Alojz Poredoš, Urban Tomc, Jaka Tušek

Method for Electrocaloric Energy Conversion

The present invention lies in the field of electrocaloric energy conversion. More specifically, the present invention relates to improvements in systems and methods which employ electrocaloric materials as a source of temperature variation in electrocaloric refrigeration processes. Even more specifically, the present invention relates to the application of electrocaloric materials in combination with a working fluid communicating with a heat source and a heat sink in counter flow.

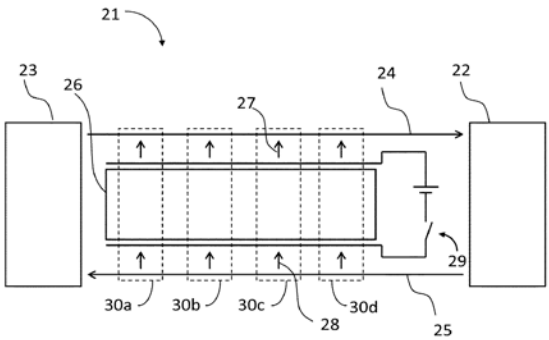

Nanotechnology and New Materials

Electronics, IT and telecoms, Industrial manufacturing, material and transport Energy

Energy, Industrial products

https://worldwide.espacenet.com/publicationDetails/originalDocument?FT=D&date=20150205&DB=&locale=en_EP&CC=WO&NR=2015014853A1&KC=A1&ND=5

WIPO

Extended patent application

EP3027980B1

29. 7. 2014

Gorenje, gospodinjski aparati d. d. [SI]

Barbara Malič, Hana Uršič, Silvo Drnovšek, Jena Cilenšek, Zdravko Kutnjak, Brigita Rožič, Uroš Flisar, Andrej Kitanovski, Marko Ožbolt, Uroš Plaznik, Alojz Poredoš, Urban Tomc, Jaka Tušek

Method for Electrocaloric Energy Conversion

https://worldwide.espacenet.com/patent/search/family/048914131/publication/EP3027980B1?q=EP3027980B1

CN105593616A

29. 7. 2014

Jožef Stefan Institute [SI], University of Ljubljana [SI]

Barbara Malič, Hana Uršič, Silvo Drnovšek, Jena Cilenšek, Zdravko Kutnjak, Brigita Rožič, Uroš Flisar, Andrej Kitanovski, Marko Ožbolt, Uroš Plaznik, Alojz Poredoš, Urban Tomc, Jaka Tušek

Method for electrocaloric energy conversion

https://worldwide.espacenet.com/publicationDetails/originalDocument?FT=D&date=20160518&DB=&locale=en_EP&CC=CN&NR=105593616A&KC=A&ND=5

US20160187034A1

29. 1. 2016

Jožef Stefan Institute [SI], University of Ljubljana [SI]

Barbara Malič, Hana Uršič, Silvo Drnovšek, Jena Cilenšek, Zdravko Kutnjak, Brigita Rožič, Uroš Flisar, Andrej Kitanovski, Marko Ožbolt, Uroš Plaznik, Alojz Poredoš, Urban Tomc, Jaka Tušek

Method for electrocaloric energy conversion

https://worldwide.espacenet.com/publicationDetails/originalDocument?FT=D&date=20160630&DB=&locale=en_EP&CC=US&NR=2016187034A1&KC=A1&ND=5

Extended patent application

PL3027980T3

29. 7. 2014

Gorenje, d. d.

Barbara Malič, Hana Uršič, Silvo Drnovšek, Jena Cilenšek, Zdravko Kutnjak, Brigita Rožič, Uroš Flisar, Andrej Kitanovski, Marko Ožbolt, Uroš Plaznik, Alojz Poredoš, Urban Tomc, Jaka Tušek

Sposób przeprowadzenia elektrokalorycznej konwersji energii

https://worldwide.espacenet.com/publicationDetails/originalDocument?FT=D&date=20171018&DB=&locale=en_EP&CC=EP&NR=3027980B1&KC=B1&ND=5

Thermoelectric Generator Comprising a Thermoelectric Element

EP2975659B1

17. 7. 2014

TDK Electronics AG [DE]

Hermann Grünbichler, Boštjan Jančar, Franz Rinner, Danilo Suvorov, Damjan Vengust, Yongli Wang

Thermoelectric Generator Comprising a Thermoelectric Element

A ceramic material for a thermoelectric element is described, wherein the ceramic material is based on the formula $(Ca_{3-x}Na_x)Co_4O_{9-\delta}$, with $0.1 \leq x \leq 2.9$ and $0 < \delta \leq 2$. Furthermore, a thermoelectric element comprising the ceramic material, a thermoelectric generator comprising the thermoelectric element and a method for producing the ceramic material are described.

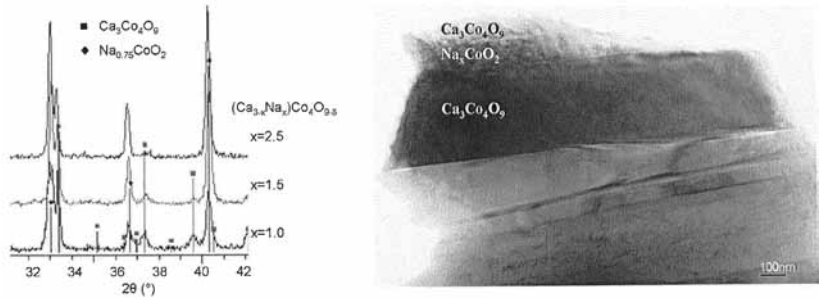

Nanotechnology and New Materials

Energy, Physical and exact sciences

Energy, Industrial products

https://worldwide.espacenet.com/patent/search/family/051211612/publication/EP2975659B1?q=ep14177502

EPO

Hybrid Sol-gel Compositions and Corrosion-resistant Coatings Based upon Same

WO2015001461A1

27. 6. 2014

Jožef Stefan Institute [SI]

Peter Rodič, Ingrid Milošev

Hybrid Sol-gel Compositions and Corrosion-resistant Coatings Based upon Same

The subject of the invention is a curable hybrid sol-gel composition including the combination of: (a) a first sol comprising the combination of (i) a hydrolysable silicon alkoxide and (ii) a silicon alkoxide having a least one non-hydrolysable substituent bonded to the silicon atom; and (b) a second sol comprising the combination of (i) a hydrolysable metal oxide in which the central metal atom is selected from the group consisting of Ti, Zr, Al, B, Sn, and V, and (ii) a (meth)acrylic acid-functional component. The cured composition is useful in a variety of compositions, e.g., as an anti-corrosion coating for metal substrates.

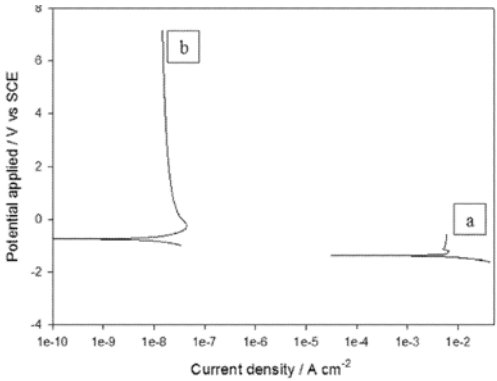

Nanotechnology and New Materials

Industrial manufacturing, material and transport

Industrial products

https://worldwide.espacenet.com/patent/search/family/051210698/publication/WO2015001461A1?q=WO2015001461

WIPO

A Method of Manufacturing for the Environment and Human Health Acceptable Construction Material from Contaminated Soil Containing Water-soluble Heavy Metal Compounds

SI24681A

18. 4. 2014

Slovenian National Building and Civil Engineering Institute [SI]

Nina Kržišnik, Radmila Milačič, Ana Mladenovič, Primož Oprčkal, Andrijana Sever Škapin, Janez Ščančar

Postopek izdelave za okolje in človeško zdravje sprejemljivega gradbenega materiala iz kontaminirane zemljine, vsebujoče vodotopne spojine težkih kovin [SL], A Method of Manufacturing for the Environment and Human Health Acceptable Construction Material from Contaminated Soil Containing Water-soluble Heavy Metal Compounds [EN]

The invention refers to a process for obtaining health- and environment acceptable construction materials from the soil containing water soluble compounds of heavy metals, which are harmful for health and environment and the content of which essentially exceeds still acceptable border values. During the first step such contaminated soil is prepared, upon which a dispersion of Fe nanoparticles is admixed to said soil, which is then followed by adding of bentonite clay in powder form and homogenization. Upon that, calcareous fly ash is added, which is optionally followed by adding water and mixing.

/

Nanotechnology and New Materials

Industrial manufacturing, material and transport, Protecting man and environment

Industrial products, Other

https://worldwide.espacenet.com/patent/search/family/053442941/publication/SI24681A?q=ap%3DSI201400151A

UIL RS

Extended patent application

EP3131688B1

11. 2. 2015

Jožef Stefan Institute [SI], Slovenian National Building and Civil Engineering Institute [SI]

Nina Kržišnik, Radmila Milačič, Ana Mladenovič, Primož Oprčkal, Andrijana Sever Škapin, Janez Ščančar

A Method of Manufacturing for the Environment and Human Health Acceptable Construction Material from Contaminated Soil Containing Water-soluble Heavy Metal Compounds

https://worldwide.espacenet.com/patent/search/family/053442941/publication/EP3131688B1?q=ap%3DSI201400151A

Extended patent application

WO2015160313A1

11. 2. 2015

Slovenian National Building and Civil Engineering Institute [SI]

Nina Kržišnik, Radmila Milačič, Ana Mladenovič, Primož Oprčkal, Andrijana Sever Škapin, Janez Ščančar

A Method of Manufacturing for the Environment and Human Health Acceptable Construction Material from Contaminated Soil Containing Water-soluble Heavy Metal Compounds

https://worldwide.espacenet.com/patent/search/family/053442941/publication/WO2015160313A1?q=ap%3DSI201400151A

Method for Synthesis of Tetragonal Zirconia Thin Films Suitable for Catalytic Devices

SI24659A

20. 3. 2014

Jožef Stefan Institute [SI]

Miran Mozetič, Nikolas Panagiotopoulos, Giorgos A. Evangelakis

Metoda za sintezo tankih plasti tetragonalnega cirkonijevega oksida primernega za katalitične naprave [SL], Method for Synthesis of Tetragonal Zirconia Thin Films Suitable for Catalytic Devices [EN]

The present invention relates to a method of synthesizing tetragonal zirconia thin film material, said method comprising interaction of zirconium or zirconium-containing materials with a reaction gas comprising oxygen under elevated temperature and the influence of a magnetic field; a tetragonal zirconium material obtained thereby and its use in treatment of hazardous organic gases or liquids.

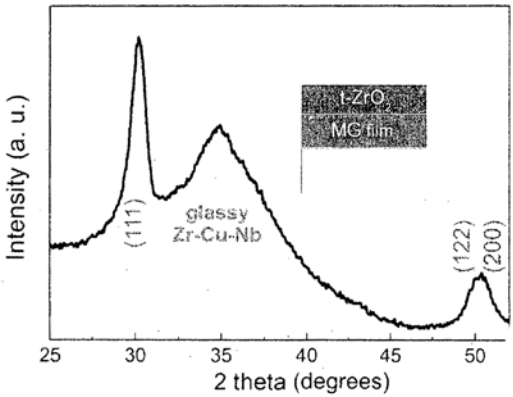

Nanotechnology and New Materials

Industrial manufacturing, material and transport

Industrial products

https://worldwide.espacenet.com/patent/search/family/053177863/publication/SI24659A?q=%20SI24659

UIL RS

Extended patent application

WO2015142295A1

19. 3. 2015

Jožef Stefan Institute [SI]

Miran Mozetič, Nikolas Panagiotopoulos, Giorgos A. Evangelakis

Method for Synthesis of Tetragonal Zirconia Thin Films Suitable for Catalytic Devices

https://worldwide.espacenet.com/patent/search/family/053177863/publication/WO2015142295A1?q=%20SI24659

2013

Method of Manufacturing Fully Dense Nd-Fe-B Magnets with Enhanced Coercivity and Gradient Microstructure

EP2869311B1

29. 10. 2013

Jožef Stefan Institute [SI]

Paul John McGuiness, Marko Soderžnik, Kristina Žagar, Andraž Kocjan, Spomenka Kobe

Method of Manufacturing Fully Dense Nd-Fe-B Magnets with Enhanced Coercivity and Gradient Microstructure

The present invention relates to a method of manufacturing fully dense Nd-Fe-B magnets by mixing Nd-Fe-B ribbons with a powder containing a heavy rare earth metal. The mixture comprises 1-4 wt% of the heavy rare earth metal and is in the first step spark plasma sintered to a fully dense nanocrystalline Nd-Fe-B magnet and subsequently in a second step annealed to allow the diffusion of the heavy rare earth metal. With this method an enhancement of coercivity of approximately 30 % can be achieved.

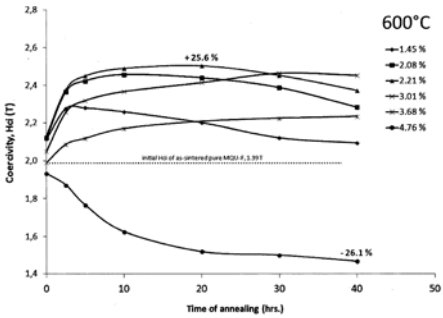

Nanotechnology and New Materials

Physical and exact sciences

Other electronics related, Industrial products

https://worldwide.espacenet.com/patent/search/family/049553978/publication/EP2869311B1?q=EP2869311B1

EPO

Method for Adjusting the Friction Coefficient of Polyvinylidene Fluoride (PVDF)

SI24472A

19. 9. 2013

Jožef Stefan Institute [SI], Center odličnosti polimerni materiali in tehnologije, PoliMaT [SI], Centre of excellence NAMASTE, Advanced Materials and Technologies for the Future [SI]

Maja Remškar, Janez Jelenc, Andrej Kržan

Fluoro-polimerni nanokompoziti s prilagojenimi tornimi lastnostmi [SL], Method for Adjusting the Friction Coefficient of Polyvinylidene Fluoride (PVDF) [EN]

This disclosure provides three-dimensional and thin film morphologies of fluoro-polymer nanocomposites with adjusted friction properties, which contain inorganic nanotube-based nanomaterials as low-friction additives. The term nanotube-based nanomaterials means nanomaterials which occur in cylindrical geometry, or are derived from cylindrical geometry by using mechanical or chemical methods. In particular, this disclosure provides a method of adjusting friction properties of PVDF based polymers with MoS2-nanotube-based as inorganic low-friction additives. Friction of the PVDF/MoS2 nanotube-based nanomaterials is substantionaly reduced with respect to PVDF coatings without the said additives.

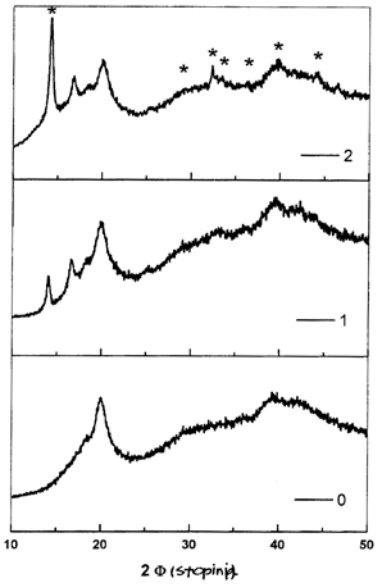

Nanotechnology and New Materials

Industrial manufacturing, material and transport, Physical and Exact Sciences

Industrial Products

https://worldwide.espacenet.com/publicationDetails/originalDocument?FT=D&date=20150331&DB=&locale=en_EP&CC=SI&NR=24472A&KC=A&ND=4

UILRS

Extended patent application

WO2015041612A1

19. 9. 2014

Jožef Stefan Institute [SI]

Maja Remškar, Janez Jelenc, Andrej Kržan

Method for Adjusting the Friction Coefficient of Polyvinylidene Fluoride (PVDF)

https://worldwide.espacenet.com/publicationDetails/biblio?FT=D&date=20150326&DB=&locale=en_EP&CC=WO&NR=2015041612A1&KC=A1&ND=4

2012

Passive Magnetic Cradle with the Mechanism of Stopping and Positioning

SI24202A

5. 10. 2012

Jožef Stefan Institute [SI]

Kristina Žužek Rožman, Paul McGuiness, Marko Soderžnik, Dejan Mir

Pasivno magnetno vodilo z mehanizmom ustavljanja in pozicioniranja [SL], Passive Magnetic Cradle with the Mechanism of Stopping and Positioning [EN]

The invention relates to the construction of a three-way sliding mechanism using magnetism, with NdFeB magnets in an antipolar geometry, which provides a minimum coefficient of friction while moving the sliding element and controlled stopping thereof in predetermined positions. The sliding, sliding and stopping of the sliding element at precisely determined points is enabled by reflective forces between the magnets attached to the upper two pairs of magnetic rails. In this way, levitation of sliding elements of larger masses is also enabled. The stabilization of the sliding element in the transverse direction to the direction of sliding is facilitated by attractive forces between the magnets attached to the pair of lower magnetic rails.

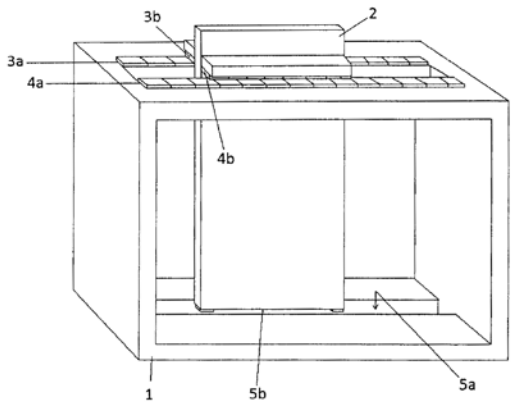

Nanotechnology and New Materials

Physical and exact sciences, Measurements and standards, Industrial manufacturing, material and transport

Other electronics related, Industrial products

https://worldwide.espacenet.com/publicationDetails/biblio?FT=D&date=20140430&DB=&locale=en_EP&CC=SI&NR=24202A&KC=A&ND=4

UIL RS

Functionalized Hydroxyapatite/Gold Composites as "Green" Materials with Antibacterial Activity and The Process for Preparing and Use Thereof

SI24094A

15. 6. 2012

Jožef Stefan Institute [SI]

Marija Vukomanović, Srečo Davor Škapin, Danilo Suvorov

Kompozitni materiali na osnovi keramične faze in kovine s funkcionalizirano površino, kot okolju prijazni materiali z antibakterijskim delovanjem, metoda priprave in njihova uporaba [SL], Functionalized Hydroxyapatite/Gold Composites as "Green" Materials with Antibacterial Activity and The Process for Preparing and Use Thereof [EN]

The present concept was developed for formation of human- and environmental- friendly material able to provide antibacterial activity. This material is composed of bioceramic (hydroxyapatite), metallic (gold) and organic part containing amino and thiol groups (amino acids) in the form of composite. Bioceramic part of this material is templating agent applied as a controller of growth and stability of metallic nanoparticles particle. These metallic nanoparticles have functionalized surface and they are centers of antibacterial activity of composites. Efficacy of antibacterial activity of these materials depends on selection of surface functionalization providing activity against both Gram-positive and Gram-negative bacteria. For developed materials this activity is much stronger compare to HAp/Ag composite which shows ability for their use as more favorable replacement of toxic silver. Materials were synthesized using sonochemical method, which has been developed as a novel, "green" approach for their formation.

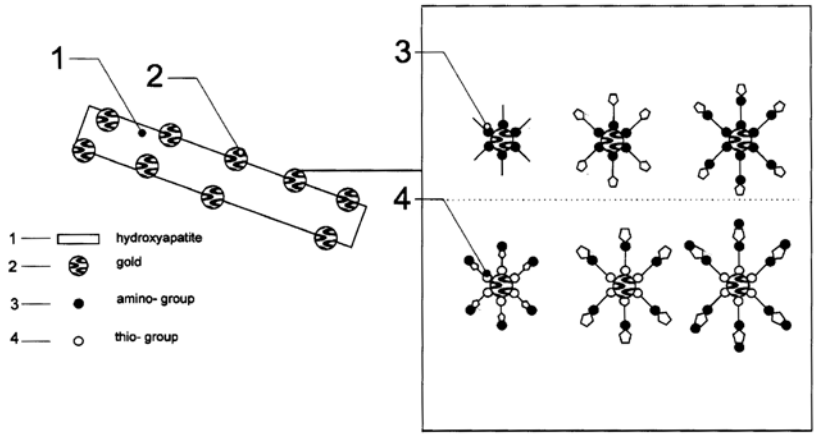

Nanotechnology and New Materials

Industrial manufacturing, Material and transport, Protecting man and environment

Consumer related, Medical / health related, Industrial products

https://worldwide.espacenet.com/publicationDetails/originalDocument?FT=D&date=20131231&DB=&locale=en_EP&CC=SI&NR=24094A&KC=A&ND=5

UIL RS

Extended patent application

WO2013187846A1

8. 5. 2013

Jožef Stefan Institute [SI]

Marija Vukomanović, Srečo Davor Škapin, Danilo Suvorov

Functionalized Hydroxyapatite/Gold Composites as "Green" Materials with Antibacterial Activity and The Process for Preparing and Use Thereof

https://worldwide.espacenet.com/publicationDetails/originalDocument?FT=D&date=20131219&DB=&locale=en_EP&CC=WO&NR=2013187846A1&KC=A1&ND=5

Extended patent application

EP2863751B1

8. 5. 2013

Jožef Stefan Institute [SI]

Marija Vukomanović, Srečo Davor Škapin, Danilo Suvorov

Functionalized Hydroxyapatite/Gold Composites as "Green" Materials with Antibacterial Activity and The Process for Preparing and Use Thereof

https://worldwide.espacenet.com/patent/search/family/048782583/publication/EP2863751B1?q=EP2863751B1

Pressure Sensor with Console Ceramic Sensor Structure

SI24085A

21. 5. 2012

In.Medica d. o. o., Jožef Stefan Institute [SI]

Marina Santo Zarnik, Darko Belavič, Marjan Hodnik, Sandi Kocjan

Senzor tlaka s konzolno keramično senzorsko strukturo [SL], Pressure Sensor with Console Ceramic Sensor Structure [EN]

This invention relates to a sensor module with a ceramic pressure sensor (1) manufactured in an elongated three-dimensional ceramic substrate having at least one cavity sealed with a measuring membrane (8) on which sensor elements are made, at one end of the substrate and with an electric connectors (12) and the reference pressure opening (9) which is connected to the cavity at the other end of the substrate via at least

one channel (10) in the substrate, and this ceramic pressure sensor is fixed in the housing so as to form a console structure in which sensor portion of the sensor (4) with a membrane (8) on a free protruding end and the housing is divided into two hermetically separated chambers, one of which is in one measured medium and in the other there is a part of the substrate on which the electronics and connectors are made, so that the part substrate with a membrane (8) in contact with a measuring medium on the opposite side of the membrane, such as the sensor elements.

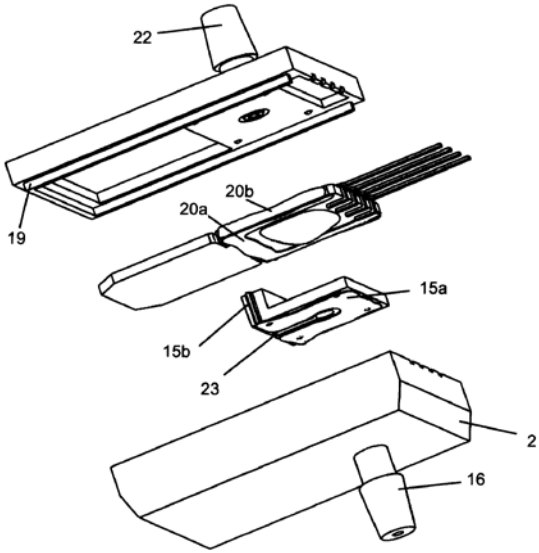

Nanotechnology and New Materials

Electronics, IT and Telecoms, Physical and exact sciences, Measurements and standards, Industrial manufacturing, material and transport

Other electronics related,
Industrial products

https://worldwide.espacenet.com/publicationDetails/biblio?FT=D&date=20131129&DB=&locale=en_EP&CC=SI&NR=24085A&KC=A&ND=4

UIL RS

A Process for The Synthesis of 4d and 5d (Nb, Mo, Ta, W) Nitrides of Transition Metals in Form of Quasi-One-Dimensional Structures

SI23988A

22. 2. 2012

Jožef Stefan Institute [SI], Center of excellence on polymer materials and technologies PoliMaT [SI]

Andrej Kovič, Adolf Jesih, Aleš Mrzel

Postopek za sintezo 4d in 5d (Nb, Mo, Ta, W) nitridov prehodnih kovin v obliki kvazi enodimenzionalnih struktur [SL], A Process for The Synthesis of 4d and 5d (Nb, Mo, Ta, W) Nitrides of Transition Metals in Form of Quasi-One-Dimensional Structures [EN]

The subject of the invention is a process for the synthesis of nitrides 4d and 5d of transition metals (Nb, Mo Ta, W) in the form of quasi-one-dimensional structures, i.e. nanoparticles, microsounds, nanotubes and microtears. The invention comprises the synthesis of nitrides of transition metals in the form of quasi-one-dimensional structures with the method of converting quasi-one-dimensional compounds with a submicro cross section of the nanoparticles described by the formula M6CyHz, 8.2 smaller than y + z less than 10, where M is a transition metal (Nb, Mp Ta, W), C is a chalcogen (sulfur (S), selenium (Se), telur (Te)); H is halogen (iodine (I)) by heating in the presence of ammonia. This process allows the synthesis of large amounts of nitrides 4d and 5d (Nb, Mo Ta, W) of transitional metals in the form of quasi-one-dimensional structures (nanoscale, microsounds, nanotubes and microtrains).

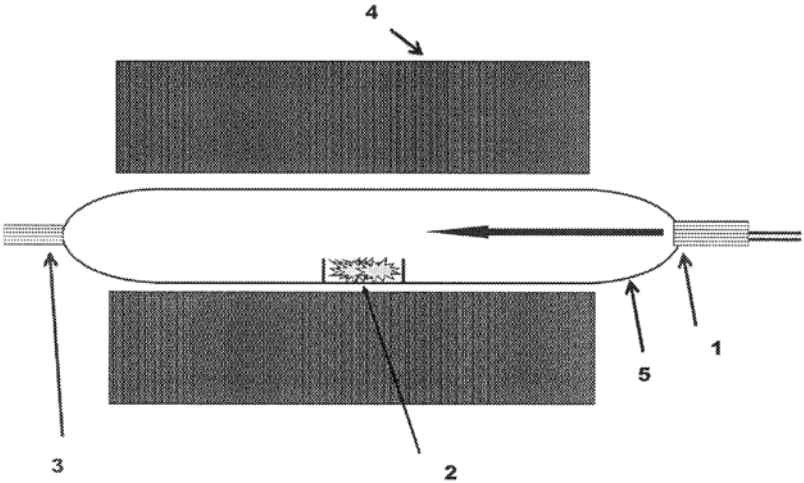

Nanotechnology and New Materials

Physical and exact sciences, Industrial manufacturing, material and transport

Energy, Industrial products

https://worldwide.espacenet.com/publicationDetails/biblio?FT=D&date=20130830&DB=&locale=en_EP&CC=SI&NR=23988A&KC=A&ND=4

UIL RS

Multilayer Ceramic Structure for Contactless Dielectrical Fluids Heating

SI24008A

17. 2. 2012

Jožef Stefan Institute [SI], HIPOT – RR, research and development of technologies and systems d. o. o. [SI], Center of excellence NAMASTE [SI]

Kostja Makarovič, Janez Holc, Darko Belavič, Darko Hrovat, Marija Kosec

Večplastna keramična struktura za nekontaktno dielektrično gretje tekočin [SL], Multilayer Ceramic Structure for Contactless Dielectrical Fluids Heating [EN]

The object of the invention is a multilayer ceramic structure that enables contactless dielectric heating of liquids and contains two electrodes, a cavity between them, and an input and output channel. Electrodes may be in direct contact with the heated liquid, but they may be protected by a thin layer of ceramics, which must be considerably thinner than the height of the cavity between the electrodes. Ceramic foils are folded in such a sequence to obtain gaps in the right places and compress the whole structure uniaxially or isostatically. Compressed multilayer ceramic structure is milled at temperatures from 800 to 1600 degrees C from 5 to 120 minutes. After firing, install the piping inlet and outlet ducts.

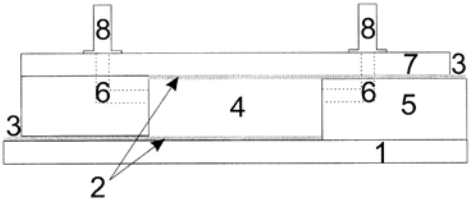

Nanotechnology and New Materials

Electronics it telecoms, Physical and exact sciences, Industrial manufacturing, material and transport , Energy

Communications, Other electronics related, Energy

https://worldwide.espacenet.com/publicationDetails/biblio?FT=D&date=20130830&DB=&locale=en_EP&CC=SI&NR=24008A&KC=A&ND=4

UIL RS

2011

The Manufacturing Process of Voids in the Ceramic Multi Layered Structures

SI23761A

3. 6. 2011

Center of excellence NAMASTE Ljubljana [SI], Hipot - RR d. o. o., research and development of technologies and systems [SI], Kekon d. o. o. [SI], Jožef Stefan Institute [SI]

Belavič Darko, Holc Janez, Hrovat Marko, Jordan Boris, Kosec Marija, Makarovic Kostja

Postopek izdelave praznin v keramičnih večplastnih strukturah [SL], The Manufacturing Process of Voids in the Ceramic Multi Layered Structures [EN]

The subject of the invention is a process of making voids in a multilayer ceramic structure by using magnesium carbonate (2) or mixtures of salts of magnesium carbonate and magnesium hydroxide in various proportions as the material in the places where the void will be. Magnesium carbonate (2) is inserted into the multilayer ceramic structure in the form of a paste or foil as an auxiliary material. The place where the magnesium carbonate (2) is located must be open after firing. The ceramic foils are folded in such a way that gaps are obtained in the right places and the whole structure is compressed uniaxially or isostatically. The compressed multilayer ceramic structure is fired at a temperature of 800 to 1400 degrees C for 5 to 240 minutes. After firing, the multilayer ceramic structure is soaked in an aqueous solution of organic acids to remove the fired magnesium carbonate (2).

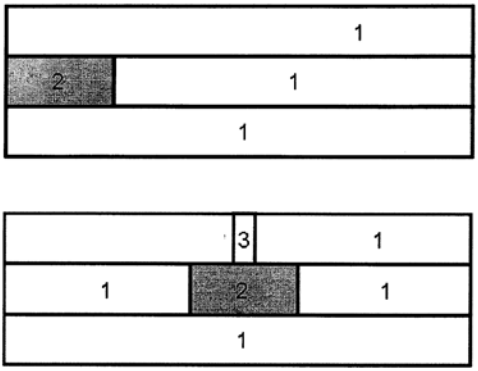

Nanotechnology and New Materials

Other industrial technologies

Industrial products

https://worldwide.espacenet.com/patent/search/family/047427465/publication/SI23761A?q=si23761

UIL RS

Sintering Heat Treatment Procedure of Formpieces

SI23763A

31. 5. 2011

Razvojno tehnološki center za vžigne sisteme in elektroniko d. o. o. [SI]

Lovro Gorjan, Aleš Dakskobler

Postopek toplotne obdelave oblikovancev s sintranjem [SL], Sintering Heat Treatment Procedure of Formpieces [EN]

The present invention relates to a process for sintering ceramic products, in particular formed by injection molding a ceramic suspension. The technical problem is how to ensure a continuous, time and energy efficient process of heat treatment of moldings by sintering, in which the molds do not cause mechanical defects such as deformations, cracks, etc. The essence of the invention is the backfilling of the moldings (3) into a highly porous backfill material (2, 4), such as activated carbon, carbon black, etc., which burns during the sintering process. The sintering heat treatment process according to the invention does not require the removal of molds from the backfill, their cleaning and / or transfer to the sintering furnace, while taking advantage of high-porosity backfill, such as accelerated removal of binder from moldings, which shortens binder removal step and prevents errors. on designers. A further advantage of the heat treatment process according to the invention is its energy efficiency. The heat released during the combustion of the binder and the highly porous backfill is used to heat the high-temperature sintering furnace.

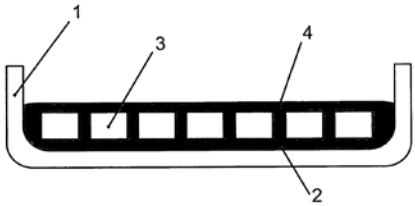

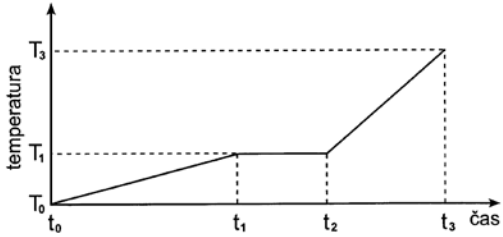

Nanotechnology and New Materials

Industrial manufacturing, Material and transport

Industrial products

https://worldwide.espacenet.com/patent/search/family/047427466/publication/SI23763A?q=si23763

UIL RS

One-Stage Process of Manufacturing Composite Ceramic Heater

SI23609A

13. 1. 2011

Jožef Stefan Institute [SI]

Tomaž Kosmač, Kristoffer Krnel, Aljoša Maglica

Enostopenjski postopek izdelave kompozitnega keramičnega grelca [SL], One-Stage Process of Manufacturing Composite Ceramic Heater [EN]

The subject of invention is a one-stage process of manufacturing composite ceramic heater before sintering powder mixtures of silicon nitride

(Si3N4), Zirconium dioxode (ZnO2) and oxide additives (Y2O3, Al2O3, Re2O3, ...) for sintering and organic additions to the design, while during sintering in an inert atmosphere of nitrogen or argon on the surface of the composite with the reaction of Si_3N_4 and ZrO_2 forms ZrN, while core product remains unreacted. After sintering the product has the right mix insulating and conductive ceramic components, and good mechanical,thermal and electrical properties.

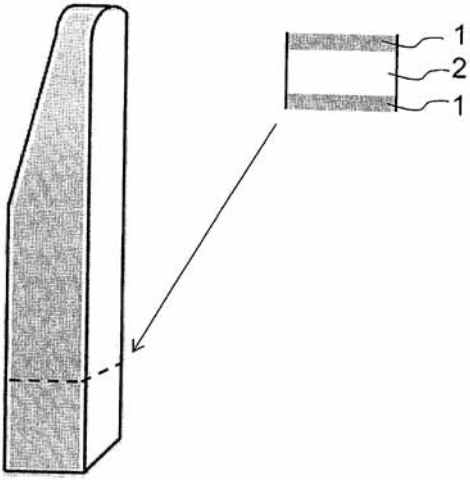

Nanotechnology and New Materials

Industrial manufacturing, material and transport, Energy

Energy, Industrial products

https://worldwide.espacenet.com/patent/search/family/046578769/publication/SI23609A?q=si23609

UIL RS

2010

Process of Magnetic Precipitation of Yeast Biomass from Sparkling Wine

SI23583A

13. 12. 2010

Jožef Stefan Institute [SI], University of Ljubljana [SI]

Marin Berovič, Suzana Bošković, Darko Makovec

Postopek magnetnega izločanja kvasne biomase iz penečega vina [SL], Process of Magnetic Precipitation of Yeast Biomass from Sparkling Wine [EN]

The subject of invention is a process of magnetic precipitation of yeast biomass from sparkling wine using magnetic particles, to replace time consuming and expensive classical process. The classical process is based on a manual turningand lifting of bottles in vertical position with neck down. Using classical procedure takes about 60 days of manual labor for spent yeast biomass to accumulate in the bottle neck as sediment. After the sediment is in the bottle neck, it is removed by freezing and removing of the neck. By using magnetic particles that are absorbed by the yeast required in secondary fermentation, or their absorption on the spent yeast biomass after the secondary fermentation, the response of biomass to a magnetic field is achieved, and can thus be magnetically precipitated. Biomass, which has absorbed magnetic particles on the yeast surface, can be in approx. 15 minutes with the help of an external magnetic field settled in the bottle neck while further proceedings remains the same as in the classical champagne process, that is, by freezing the sediment and its removal.

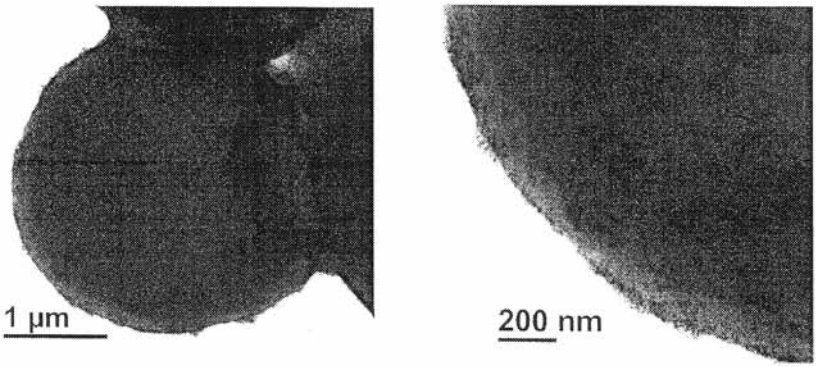

Nanotechnology and New Materials

Biological sciences, Agrofood industry

Other, Industrial products

https://worldwide.espacenet.com/patent/search/family/045688225/publication/SI23583A?q=si23583

UIL RS

Extended patent application

WO2012082079A1

12. 12. 2011

Marin Berovič [SI], Suzana Bošković [SI], Jožef Stefan Institute [SI], Darko Makovec [SI], University of Ljubljana [SI]

Marin Berovič, Suzana Bošković, Darko Makovec

Process of Magnetic Precipitation of Yeast Biomass from Sparkling Wine

https://worldwide.espacenet.com/patent/search/family/045688225/publication/WO2012082079A1?q=pn%3DWO2012082079A1

Method for the Preparation of Carrier Colloidal Powder with High Specific Surface Area

SI23580A

9. 12. 2010

Jožef Stefan Institute [SI]

Aleš Dakskobler, Andraž Kocjan, Manca Logar

Postopek priprave nosilnega koloidnega prahu z visoko specifično površino [SL], Method for the Preparation of Carrier Colloidal Powder with High Specific Surface Area [EN]

The subject of the invention is a method for the preparation of carrier colloidal powder with high specific surface area for application of a thin layer and/or nanoparticles. Due to a very large specific surface area and porosity of the carrier particles certain properties of nanoparticles that they exhibit due to their small size are preserved or even increased in comparison with the use of nanoparticles as such. Handling the so prepared composite colloidal particles with an increased specific surface area is very simple. The carrier powder is produced by exploiting hydrolysis of the AlN powder, wherein during a reaction between AlN and water the decomposed AlN particles are replaced by a number of agglomerates of porous particles from AlOOH with a high specific surface area that can be subsequently thermally treated in order to obtain the particles from one of the transitional forms of Al2O3, i. e. y-, δ- or θ-Al2O3, without any significant change in the morphology of the particles.

/

Nanotechnology and New Materials

Industrial manufacturing, Material and transport

Industrial products

https://worldwide.espacenet.com/patent/search/family/046384041/publication/SI23580A?q=si%0923580

UIL RS

Method For The Preparation Of Carrier Colloidal Powder With Specific Surface Area

SI23502A

20. 10. 2010

Jožef Stefan Institute [SI]

Aleš Dakskobler, Andraž Kocjan, Manca Logar

Priprave nosilnega koloidnega prahu z visoko specifično površino [SL], Method for the Preparation of Carrier Colloidal Powder with High Specific Surface Area [EN]

The subject of the invention is a method for the preparation of carrier

colloidal powder with high specific surface area for application of a thin layer and/or nanoparticles. Due to a very large specific surface area and porosity of the carrier particles certain properties of nanoparticles that they exhibit due to their small size are preserved or even increased in comparison with the use of nanoparticles as such. Handling the so prepared composite colloidal particles with an increased specific surface area is very simple. The carrier powder is produced by exploiting hydrolysis of the A1N powder, wherein during a reaction between A1N and water the decomposed A1N particles are replaced by a number of agglomerates of porous particles from A100H with a high specific surface area that can be subsequently thermally treated in order to obtain the particles from one of the transitional forms of Al203, i. e. y-, 8- or 9-Al203, without any significant change in the morphology of the particles.

/

Nanotechnology and New Materials

Industrial manufacturing, Material and transport

Industrial products

https://worldwide.espacenet.com/patent/search/family/045992892/publication/SI23502A?q=si23502

UIL RS

Process for Production of Alumina Porcelain with Improved Mechanical Properties

SI23546A

25. 11. 2010

Jožef Stefan Institute [SI], ETI Elektroelement d. d. [SI]

Janez Holc, Marija Kosec, Danjela Kuščer Hrovatin, Ivan Lavrač, Helena Razpotnik

Postopek za izdelavo gliničnega porcelana z izboljšanimi mehanskimi lastnostmi [SL], Process for Production of Alumina Porcelain with Improved Mechanical Properties [EN]

The subject invention is alumina porcelain used in the electrotechnics and process of its construction. Alumina porcelain after the invention

belongs to the group of alkali alumosillicate porcelain with high mechanical strength. Alumina porcelain after the invention is prepared from the followingraw material: 25 to 38 weight percent of calcite alumina, 20 to 33percent by weight of kaolin, 26 to 37 weight percent clay, 19 to26 weight percent potassium feldspar, 5 to 35 weight percentground porcelain shards and 0.01 to 1 weight percentsurfactants. The mixture can be served together from 1-24 hoursor by a mixture of clay and feldspar served 1-12 hours, addalumina, ground potsherd porcelain, kaolin and surfaceactive substances and further served 1-12 hours. Formed material is burning in the temperature range from 1280 to 1320 degrees C from 1 to 4hours. Alumina porcelain with the stated composition and prepared underprocedure described above has a flexural strength of 130 MPa and homogeneousmicrostructure. Porcelain potsherd that remains after processing isground into a powder of average particle size of 5 to 50 micrometersand is used in the manufacture of the raw material mixture.

/

Nanotechnology and New Materials

Industrial manufacturing, Material and transport

Industrial products

https://worldwide.espacenet.com/patent/search/family/046209410/publication/SI23546A?q=si23546

UIL RS

Synthesis Method for Obtaining Anatase Nanoparticles of High Specific Surface Area and Spherical Morphology

SI23501A

25. 10. 2010

Cinkarna Metalurško kemična industrija Celje, d. d. [SI]

Miran Čeh, Zoran Samardžija, Aljaž Selišnik, Dejan Verhovšek, Nika Veronovski

Postopek za pridobivanje nanodelcev anatasa visoke specifične površine in sferične morfologije [SL], Synthesis Method for Obtaining Anatase Nanoparticles of High Specific Surface Area and Spherical Morphology [EN]

The subject of the invention is anatase nanoparticles and ways of the synthesis thereof by a gel-sol method from sodium titanate, which is produced from metatitanic acid in a reaction with NaOH. The molar ratio between NaOH and TiO2 must be low for a synthesis of sodium titanate, if the goal is to synthetize anatase, i. e. is between 1:3 to 1:1. If the goal is to synthetize rutile, the molar ratio must be higher, at least between 3:1 to 4:1. In the gel-sol reaction between sodium titanate and acid very small anatase particles are formed that are of spherical morphology, polycrystalline and present in the acidic suspension. The size of crystallites that constitute the anatase particles is approximately 5 nm, wherein the particles themselves are bigger, somewhere between 40 to 60 nm. The subject of the invention is also a manner of stabilising the acidic suspension of nanoparticles, which allows an increase in pH value without causing excessive agglomeration, which is achieved by the use of an suitable dispersant, citric acid. A further subject of the invention is a hydrothermal method, which allows re-crystallisation of polycrystalline anatase nanoparticles into a monocrystalline form under hydrothermal conditions in an autoclave at a temperature about 130 stopinj C or more and at adequate pressure of the water vapour.

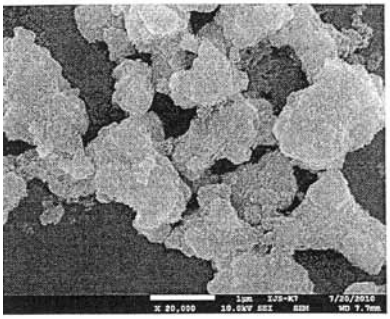

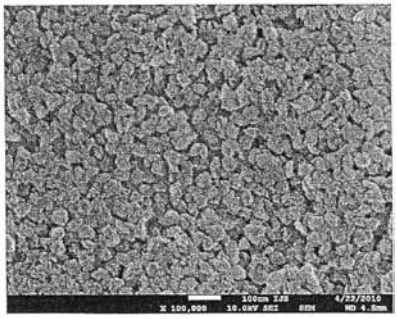

Nanotechnology and New Materials

Industrial manufacturing, Material and transport

Industrial products

https://worldwide.espacenet.com/patent/search/family/045446163/publication/SI23501A?q=si23501

UIL RS

Extended patent application

WO2013062491A1

25. 10. 2011

Cinkarna Metalurško kemična industrija Celje, d. d. [SI], Miran Čeh [SI], Zoran Samardžija [SI], Aljaž Selišnik [SI], Dejan Verhovšek [SI], Nika Veronovski [SI]

Miran Čeh, Zoran Samardžija, Aljaž Selišnik, Dejan Verhovšek, Nika Veronovski

Synthesis Method for Obtaining Anatase Nanoparticles of High Specific Surface Area and Spherical Morphology

https://worldwide.espacenet.com/patent/search/family/045446163/publication/WO2013062491A1?q=si23501

Improved Magnetocaloric Material and Procedure of Its Manufacture

SI23405A

17. 6. 2010

Jožef Stefan Institute [SI]

Spomenka Kobe, Paul John McGuiness, Benjamin Podmiljšak

Izboljšan magnetokalorični material in postopek njegove izdelave [SL], Improved Magnetocaloric Material and Procedure of Its Manufacture [EN]

The present invention relates to a magnetocaloric material based on GdSi2Ge2 and a procedure of its manufacture assuring the increase in cooling capacity and control of maximum magnetocaloric effect temperature in the magnetocaloric material based on GdSi2Ge2 by addition of iron which replaces elements in the base alloy in various quantities. Such a material would be applicable as a working material in a magnetic cooler. According to the invention, the material based on GdSi2Ge2 is characteristic in that silicon and germanium are simultaneously replaced with iron according to the equation Gd5Si(2-x/2)Ge(2-x/2)Fex, where x is between 0.06 and 0.25. The magnetocaloric material is prepared by means of an arc smelter from suitable mixtures of elements in a water cooled copper container under argon atmosphere, where after each arc melting the

material is turned around and molten again and the procedure is repeated four times, then it is thermally treated so that it is closed in a quartz tube under vacuum and heated to 1300 degrees Celsius in a tube oven for 4 hours and finally cooled down with cold water at once.

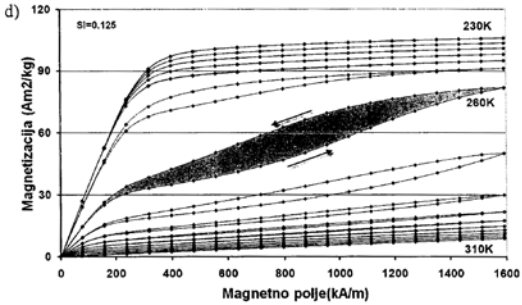

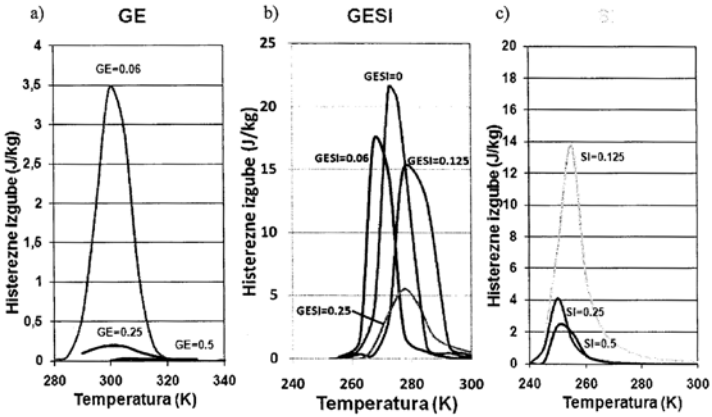

Nanotechnology and New Materials

Industrial manufacturing, material and transport

Industrial products, Other electronics related, Energy

https://worldwide.espacenet.com/patent/search/family/045407005/publication/SI23405A?q=si23405

UIL RS

Bone Implants with Multilayered Coating and Process of Their Preparation

SI23420A

22. 7. 2010

Jožef Stefan Institute [SI]

Nataša Drnovšek, Gregor Murn, Saša Novak Krmpotič

Kostni vsadki z večslojno prevleko in postopek njihove priprave [SL], Bone Implants with Multilayered Coating and Process of Their Preparation [EN]

The present invention relates to an implant having a multilayered coating comprising a porous titanium-based layer on the implant, an optional interface titania layer on and/or in the porous titanium-based layer and a bioactive glass layer on and/or in the porous structure formed by the titanium-based and titania layer(s); as well as to a process for preparing an implant having a multilayered coating.

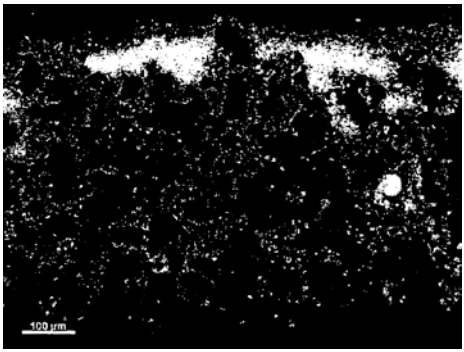

Nanotechnology and New Materials

Biological sciences, Physical and exact sciences

Medical / health related

https://worldwide.espacenet.com/patent/search/family/044354171/publication/SI23420A?q=si23420

UIL RS

Extended patent application

US10322001B2

13. 4. 2011

Jožef Stefan Institute [SI], Nataša Drnovšek [SI], Gregor Murn [SI], Saša Novak Krmpotič [SI]

Nataša Drnovšek, Gregor Murn, Saša Novak Krmpotič

Implant Having a Multilayered Coating and a Process for Preparing Thereof

https://worldwide.espacenet.com/patent/search/family/044354171/publication/US10322001B2?q=US10322001B2

Extended patent application

WO2012011878A1

13. 4. 2011

Jožef Stefan Institute [SI], Nataša Drnovšek [SI], Gregor Murn [SI], Saša Novak Krmpotič [SI]

Nataša Drnovšek, Gregor Murn, Saša Novak Krmpotič

Implant Having a Multilayered Coating and a Process for Preparing Thereof

https://worldwide.espacenet.com/patent/search/family/044354171/publication/WO2012011878A1?q=pn%3DWO2012011878A1

Extended patent application

EP2595669A1

13. 4. 2011

Jožef Stefan Institute [SI]

Nataša Drnovšek, Gregor Murn, Saša Novak Krmpotič

Implant Having a Multilayered Coating and a Process for Preparing Thereof

https://worldwide.espacenet.com/patent/search/family/044354171/publication/EP2595669A1?q=pn%3DEP2595669A1

Bioactive and Photocatalytic Coating on Metal Orthopaedic and Dental Implants and Procedure of Preparation

SI23312A

19. 3. 2010

Jožef Stefan Institute [SI]

Nataša Drnovšek, Saša Novak Krmpotič

Bioaktivna in fotokatalitska prevleka na kovinskih ortopedskih in dentalnih vsadkih in postopek priprave [SL], Bioactive and Photocatalytic Coating on Metal Orthopaedic and Dental Implants and Procedure of Preparation [EN]

The subject of the invention is a bioactive and photocatalytic coating on metal orthopaedic and dental implants and a procedure of its preparation. The coating based on titanium oxide is prepared by hydrothermal treatment of metal implants in an autoclave at a temperature of 100-300 degrees Celsius for 6-96 hours in a saturated water solution of Ti, Ca, Mg, P, Si, Sr and Zn ions, having a pH value of 3 to 12. After the hydrothermal treatment, there is an up to 5 micrometres thick coating on a metal implant, based on titanium oxide in the form of anatase, the grains being of a pinacoid shape and containing essential microelements, the coating is firmly bound to the substrate, it is hydrophilic and photocatalytic and in irradiation by UV-light it decomposes organic and biological impurities or sterilizes the surface, forms hydroxyapatite on surfaces

in a simulated body liquid and prevents direct contact of blood plasma with cytotoxic and allergenic metals, e.g. with aluminium and vanadium in Ti6Al4V. In this way the coating on the basis of titanium oxide, prepared by hydrothermal treatment of metal implants, accelerates and enhances the osteointegration of implants and reduces the later negative effect on the organism.

/

Nanotechnology and New Materials

Physical and exact sciences, Biological sciences

Medical / health related

https://worldwide.espacenet.com/patent/search/family/044676219/publication/SI23312A?q=si23312

UIL RS

2009

Material in The Form of Lithium Fluoride Powder Containing Colour Centres, Method for Preparation and Use Thereof

ITPD20090376A1

18. 12. 2009

Sincrotrone Trieste S.C.p.A. [IT], Jožef Stefan Institute [SI]

Luca Gregoratti, Marija Kosec, Danjela Kuščer Hrovatin, Marco Peloi

Material in The Form of Lithium Fluoride Powder Containing Colour Centres, Method for Preparation and Use Thereof

The present invention describes a material in the form of lithium fluoride powder containing colour centres and the method for its preparation, by the formation of colour centres based on irradiating the powder with synchrotron radiation (light). The method involves mechanically reducing the size of the particles that form the LiF powder and the formation of colour centres therein by its exposure to synchrotron radiation. The so activated powder, which maintains the transparency characteristics of the original material if exposed to sunlight, can find wide use as an additive both in common printing inks and in pigments used in the artistic field to be used for the formation of marks on artefacts for anti-counterfeiting/identification purposes.

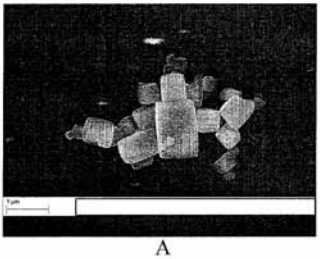

A

B

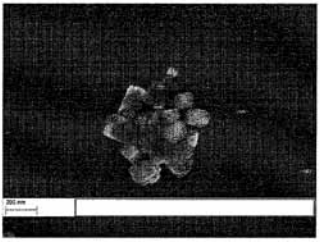

C

Nanotechnology and New Materials

Industrial manufacturing, material and transport

Consumer related, Industrial products

https://worldwide.espacenet.com/patent/search/family/042352340/publication/ITPD20090376A1?q=us8535434

ITPD

Extended patent application

EP2512990B1

17. 12. 2010

Sincrotrone Trieste S.C.p.A. [IT], Jožef Stefan Institute [SI]

Luca Gregoratti, Marija Kosec, Danjela Kuščer Hrovatin, Marco Peloi, Giuseppina Palma

Material in The Form of Lithium Fluoride Powder Containing Colour Centres, Method for Preparation and Use Thereof

https://worldwide.espacenet.com/patent/search/family/042352340/publication/EP2512990B1?q=EP2512990B1

Extended patent application

WO2011073399A3

17. 12. 2010

Sincrotrone Trieste S.C.p.A. [IT], Jožef Stefan Institute [SI], Luca Gregoratti [IT], Marija Kosec [SI], Danjela Kuščer Hrovatin [SI], Marco Peloi [IT], Giuseppina Palma [IT]

Luca Gregoratti, Marija Kosec, Danjela Kuščer Hrovatin, Marco Peloi, Giuseppina Palma

Material in The Form of Lithium Fluoride Powder Containing Colour Centres, Method for Preparation and Use Thereof

https://worldwide.espacenet.com/patent/search/family/042352340/publication/WO2011073399A3?q=WO2011073399A3

Extended patent application

US8535434B2

17. 12. 2010

Sincrotrone Trieste S.C.p.A. [IT], Jožef Stefan Institute [SI], Luca Gregoratti [IT], Marija Kosec [SI], Danjela Kuščer Hrovatin [SI], Marco Peloi [IT], Giuseppina Palma [IT]

Luca Gregoratti, Marija Kosec, Danjela Kuščer Hrovatin, Marco Peloi, Giuseppina Palma

Material in The Form of Lithium Fluoride Powder Containing Colour Centres, Method for Preparation and Use Thereof

https://worldwide.espacenet.com/patent/search/family/042352340/publication/US8535434B2?q=US8535434B2

Anatase Nanoparticles and Process of Synthesis for Obtaining Anatase Nanoparticles

SI23219A

4. 11. 2009

Cinkarna metalursko kemična industrija Celje, d. d. [SI]

Dejan Verhovšek, Kristina Žagar, Miran Čeh, Pavel Blagotinšek, Sašo Šturm, Tomi Gominšek

Nanodelci anatasa in postopek sinteze za pridobivanje nanodelcev anatasa [SL], Anatase Nanoparticles and Process of Synthesis for Obtaining Anatase Nanoparticles [EN]

The subject of the invention are anatase nanoparticles and a process of synthesis for obtaining anatase nanoparticles from metatitanium acid

which is a semifinished product in the production of TiO2 pigments. The synthesis of anatase nanoparticles from metatitanium acid is based on the so called gel-sol process. Anatase nanoparticles according to the invention are very fine particles in the form of an acid/neutral suspension, where anatase nanoparticles are polycrystalline and the crystallites exhibit isothropic morphology and have a diameter of about 4-5 nm, while anatase nanoparticles themselves have a diameter between 30 and 80 nm and a specific surface of 200 m^2/g or more.

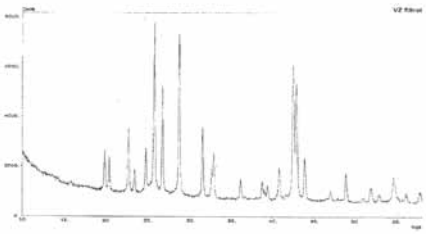

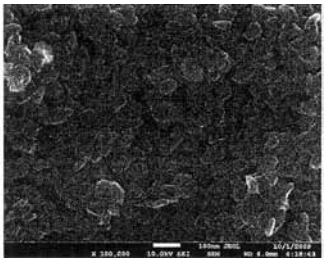

Nanotechnology and New Materials

Industrial manufacturing, material and transport

Industrial products

https://worldwide.espacenet.com/patent/search/family/044065513/publication/SI23219A?q=si23219

UIL RS

Rutile Nanoparticles and Process of Synthesis for Obtaining Rutile Nanoparticles

SI23218A

4. 11. 2009

Cinkarna metalursko kemična industrija Celje, d. d. [SI]

Dejan Verhovšek, Kristina Žagar, Miran Čeh, Pavel Blagotinšek, Sašo Šturm, Tatjana Rozman

Nanodelci rutila in postopek sinteze za pridobivanje nanodelcev rutile [SL], Rutile Nanoparticles and Process of Synthesis for Obtaining Rutile Nanoparticles [EN]

The subject of the invention are rutile nanoparticles and a process of synthesis for obtaining rutile nanoparticles from metatitanium acid which is a semifinished product in the production of TiO2 pigments. The synthesis of rutile nanoparticles from metatitanium acid is based on the so called gel-sol process. Rutile nanoparticles according to the invention are very fine particles in the form of an acid/neutral suspension, where rutile nanoparticles are polycrystalline and the crystallites exhibit anisothropic morphology and are about 5 nm wide and several 10 nm long, while rutile nanoparticles themselves have a size between 60 and 100 nm in length and 15 to 50 mm in width and a specific surface between 90 and 160 m2/g.

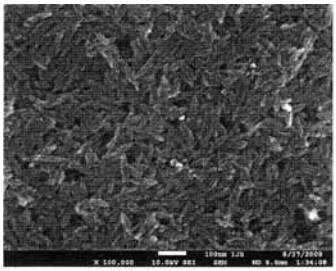

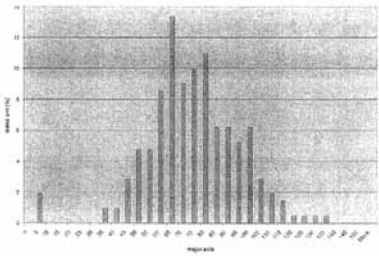

Nanotechnology and New Materials

Industrial manufacturing, material and transport

Industrial products

https://worldwide.espacenet.com/patent/search/family/043532607/publication/SI23218A?q=si23218

UIL RS

Extended patent application

WO2011056151A1

20. 10. 2010

Cinkarna metalursko kemična industrija Celje, d. d. [SI], Dejan Verhovšek [SI], Kristina Žagar [SI], Miran Čeh [SI], Pavel Blagotinšek [SI], Sašo Šturm [SI], Tatjana Rozman [SI]

Dejan Verhovšek, Kristina Žagar, Miran Čeh, Pavel Blagotinšek, Sašo Šturm, Tatjana Rozman

Rutile Nanoparticles and Process of Synthesis for Obtaining Rutile Nanoparticles

https://worldwide.espacenet.com/patent/search/family/043532607/publication/WO2011056151A1?q=pn%3DWO2011056151A1

Photocatalytic Deposits of TiO2 on Superparamagnetic Carriers and Procedure of Their Manufacture

SI23210A

3. 11. 2009

Cinkarna metalurško kemična industrija Celje, d. d., [SI]

Darko Makovec, Marjan Sajko, Dejan Verhovšek

Fotokatalitski nanosi TiO2 na superparamagnetnih nosilcih ter postopek njihove izdelave [SL], Photocatalytic Deposits of TiO2 on Superparamagnetic Carriers and Procedure of Their Manufacture [EN]

The subject of the invention is a material composed of a photocatalytic deposit of TiO2 on superparamagnetic nanoparticle agglomerates and a procedure of application of TiO2 deposits on solid carriers. The material is utilized as a photocatalyst, e.g. for decomposition of organic pollutants in water and in the air. TiO2 layers on solid carriers are also important for applications in photovoltaics, nonlinear optics, for manufacturing of antibacterial coatings, self-cleaning coatings, etc. The procedure of application of TiO2 deposits on solid carriers is based on the hydrolysis of TiOSO4 in a water solution under elevation of pH value in the presence of a solid carrier with appropriately treated surface. The products according to the procedure are TiO2 deposits with a thickness from 1 to 100 nm. Thickness of TiO2 layer is controlled by the ratio of quantities of a solid carrier and TiOSO4 or by several repetitions of the application process. The TiO2 layer is amorphous or in a nanocrystalline anatase form.

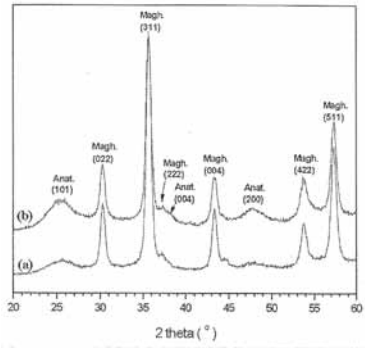

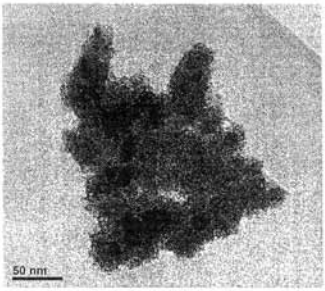

Nanotechnology and New Materials

Industrial manufacturing, material and transport, Physical and exact sciences

Industrial products

https://worldwide.espacenet.com/patent/search/family/044065508/publication/SI23210A?q=si23210

UIL RS

Amorphous Multicomponent Dielectric Based on the Mixture of High Band Gap and High K Materials, Respective Devices and Manufacture

PT2462611T

5. 8. 2010

Jožef Stefan Institute [SI], The NOVA School of Science and Technology [PT], University of Barcelona [ES]

Danjela Kuščer Hrovatin, Elvira Maria Correia Fortunato, Gonçalo Pedro Gonçalves, Luís Miguel Nunes Pereira, Marija Kosec, Pedro Miguel Cândido Barquinha, Rodrigo Ferrão de Paiva Martins

Amorphous Multicomponent Dielectric Based on the Mixture of High Band Gap and High K Materials, Respective Devices and Manufacture

The present invention relates to a high performance thin-film, transistor entirely processed at temperatures not exceeding 150°C, using amor-

phous multi component dielectrics based on the mixture of high band gap and high dielectric constant (K) materials. The invention relates to the use of sputtered or ink jet printed mixed dielectric materials such as Ta2O5 with SiO2 or Al2O3 or HfO2 with SiO2 or Al2O3. These multicomponent dielectrics allow producing amorphous dielectrics to be introduced in high stable electronic devices with low leakage currents, while preserving a high dielectric constant. This results in producing thin film transistors with remarkable electrical properties, such as the ones produced based on Ga-In-Zn oxide as channel layers and where the dielectric was the combination of the mixture Ta2O5:SiO2, exhibiting field- effect mobility exceeding 35 cm2 V-1 s-1, close to 0 V turn- on voltage, on/off ratio higher than 106 and subthreshold slope below 0.24 V dec-1.

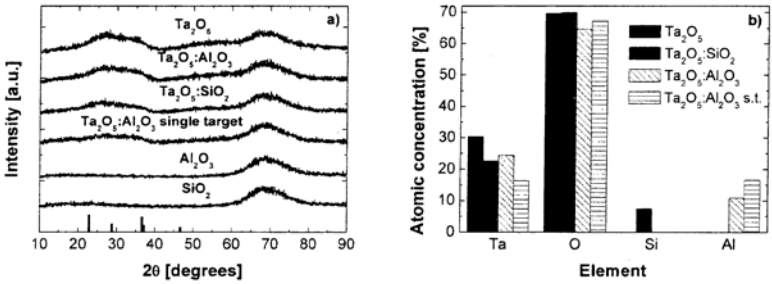

Nanotechnology and New Materials

Electronics, IT and telecoms

Computer related, Other electronics related

https://worldwide.espacenet.com/patent/search/family/043544816/publication/PT2462611T?q=PT2462611

PT

Extended patent application

BR112012002681A2

5. 8. 2010

Jožef Stefan Institute [SI], The NOVA School of Science and Technology [PT], University of Barcelona [ES]

Danjela Kuščer Hrovatin, Elvira Maria Correia Fortunato, Gonçalo Pedro Gonçalves, Luís Miguel Nunes Pereira, Marija Kosec, Pedro Miguel Cândido Barquinha, Rodrigo Ferrão de Paiva Martins

Dielétricos multicompostos amorfos baseados na mistura de materiais com elevada banda proibida e k elevado, respectivos dispositivos e fabricação

https://worldwide.espacenet.com/patent/search/family/043544816/publication/BR112012002681A2?q=pn%3DBR112012002681A2

Extended patent application

EP2462611B1

5. 8. 2010

Jožef Stefan Institute [SI], The NOVA School of Science and Technology [PT], University of Barcelona [ES]

Danjela Kuščer Hrovatin, Elvira Maria Correia Fortunato, Gonçalo Pedro Gonçalves, Luís Miguel Nunes Pereira, Marija Kosec, Pedro Miguel Cândido Barquinha, Rodrigo Ferrão de Paiva Martins

Amorphous Multicomponent Dielectric Based on the Mixture of High Band Gap and High K Materials, Respective Devices and Manufacture

https://worldwide.espacenet.com/patent/search/family/043544816/publication/EP2462611B1?q=EP2462611B1

Extended patent application

WO2011016741A2

5. 8. 2010

Jožef Stefan Institute [SI], The NOVA School of Science and Technology [PT], University of Barcelona [ES], Pedro Miguel Candido Barquinha [PT], Elvira Maria Correia Fortunato [PT], Rodrigo Ferrão de Paiva Martins

[PT], Pedro Goncalves Goncalo [PT], Marija Kosec [SI], Danjela Kuščer Hrovatin [SI], Luis Miguel Nunes Pereira [PT]

Danjela Kuščer Hrovatin, Elvira Maria Correia Fortunato, Gonçalo Pedro Gonçalves, Luís Miguel Nunes Pereira, Marija Kosec, Pedro Miguel Cândido Barquinha, Rodrigo Ferrão de Paiva Martins

Amorphous Multicomponent Dielectric Based on the Mixture of High Band Gap and High K Materials, Respective Devices and Manufacture

https://worldwide.espacenet.com/patent/search/family/043544816/publication/WO2011016741A2?q=pn%3DWO2011016741A2

Extended patent application

US8987097B2

5. 8. 2010

Jožef Stefan Institute [SI], The NOVA School of Science and Technology [PT], University of Barcelona [ES], Pedro Miguel Candido Barquinha [PT], Elvira Maria Correia Fortunato [PT], Rodrigo Ferrão de Paiva Martins [PT], Pedro Goncalves Goncalo [PT], Marija Kosec [SI], Danjela Kuščer Hrovatin [SI], Luis Miguel Nunes Pereira [PT]

Danjela Kuščer Hrovatin, Elvira Maria Correia Fortunato, Gonçalo Pedro Gonçalves, Luís Miguel Nunes Pereira, Marija Kosec, Pedro Miguel Cândido Barquinha, Rodrigo Ferrão de Paiva Martins

Amorphous Multicomponent Dielectric Based on the Mixture of High Band Gap and High K Materials, Respective Devices and Manufacture

https://worldwide.espacenet.com/patent/search/family/043544816/publication/US8987097B2?q=US8987097B2

Alumina Porcelain with Improved Thermal Properties and Procedure of Its Manufacture

SI23000A

30. 3. 2009

ETI Elektroelement d. o. o. [SI], Jožef Stefan Institute [SI]

Marjan Buh, Janez Holc, Marija Kosec, Ivan Lavrač, Martina Oberžan

Glinični porcelan z izboljšanimi termičnimi lastnostmi in postopek njegove izdelave [SL], Alumina Porcelain with Improved Thermal Properties and Procedure of Its Manufacture [EN]

The subject of the invention is alumina porcelain and a procedure of its manufacture. Alumina porcelain according to the invention belongs to the group of alkali alumosilicate porcelains with low thermal dilatation coefficient and contains from 58 to 62 wt.% aluminium oxide, from 0.1 to 0.3 wt.% sodium oxide, from 1.5 to 2.5 wt.% potassium oxide and from 1.0 to 1.4 wt.% lithium oxide. The iron oxide content in the material is less than 0.5 wt.%. After sintering in the temperature range from 1290 to 1330 degrees Celsius, ceramic material is thermally treated at a temperature between 900 and 1050 degrees Celsius in the period of 10 to 240 minutes. Ceramic material with the said composition and sintered and thermally treated according to the procedure described shows a thermal dilatation coefficient from 4.6 to 5.2 x 10 exp6/K within the temperature range from 20 to 600 degrees Celsius, a flexural strength higher than 160 MPa and contains minerals such as corundum, mullite and lithium alumosilicate.

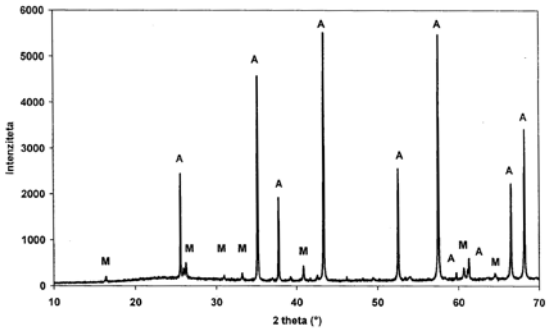

Nanotechnology and New Materials

Industrial manufacturing, material and transport

Industrial products, Other

https://worldwide.espacenet.com/patent/search/family/042824911/publication/SI23000A?q=si23000

UIL RS

2008

Procedure of Preparation of Ceramics Based on Alkali Niobates and Alkali Niobate Tantalates by Mechanochemical Activation

SI22838A

2. 7. 2008

Jožef Stefan Institute [SI]

Janez Holc, Marija Kosec, Tadej Rojac

Postopek priprave keramike na osnovi alkalijskih niobatov in alkalijskih niobatov tantalatov z mehanokemijsko aktivacijo [SL], Procedure of Preparation of Ceramics Based on Alkali Niobates and Alkali Niobate Tantalates by Mechanochemical Activation [EN]

The subject of the invention is a procedure of preparation of ceramics based on alkali niobates and alkali niobate tantaletes by mechanochemical activation of the starting mixture of powders. Starting powders are first homogenised in acetone or a similar organic solvent, then mechanochemically activated by dry grinding, heated, ground again in an organic solvent, dried, pressed in shapes and sintered at higher temperatures. After the heating of the mechanochemically activated powder, the formed alkali niobate or alkali niobate tantalate does not contain any secondary phases.

/

Nanotechnology and New Materials

Industrial manufacturing, material and transport

Industrial products

https://worldwide.espacenet.com/patent/search/family/041625973/publication/SI22838A?q=si22838

UIL RS

A Process for the Synthesis of Nanotubes and Fullerene-Like Nanostructures of Transition Metals Dichalcogenides, Quasi One-Dimensional Structures of Transition Metals and Oxides of Transition Metals

WO2008121081A3

28. 3. 2008

Jožef Stefan Institute [SI], Adolf Jesih [SI], Aleš Mrzel [SI], Maja Remškar [SI], Marko Viršek [SI]

Adolf Jesih, Aleš Mrzel, Maja Remškar, Marko Viršek

A Process for the Synthesis of Nanotubes and Fullerene-Like Nanostructures of Transition Metals Dichalcogenides, Quasi One-Dimensional Structures of Transition Metals and Oxides of Transition Metals

The object of the invention is a process for the synthesis of nanotubes of transition metal dichalcogenides, of fullerene-like nanostructures of transition metal dichalcogenides, of nanotubes of transition metal dichalcogenides, filled with fullerene-like nanostructures of transition metal dichalcogenides, of quasi one- dimensional structures (nanowires, microwires and ribbons) of transition metal oxides and of quasi one-dimensional structures of transition metal dichalcogenides, consisting of fine crystallites of transition metal dichalcogenides. The process is characterized in that the synthesis occurs by the chemical transformation of quasi one-dimensional compounds with a sub-micron diameter, described by the formula M₆C_yH₂, 8.2<y+z<10, where M is a transition metal (Mo, W, Ta, Nb), C is a chalcogen (S, Se, Te), H is a halogen (I).

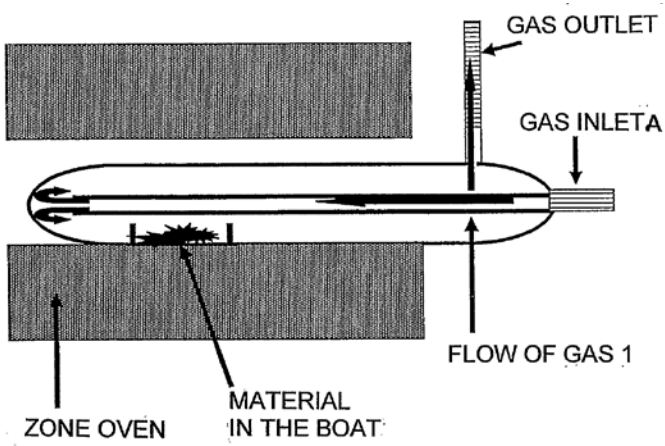

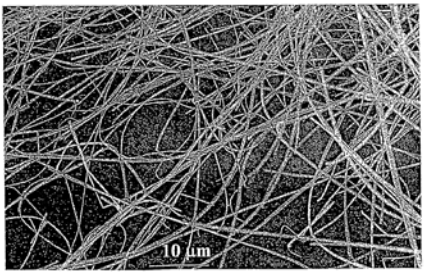

Nanotechnology and New Materials

Physical and exact sciences

Industrial products, Other

https://worldwide.espacenet.com/patent/search/family/039808813/publication/WO2008121081A2?q=WO2008121081A2

WIPO

Extended patent application

EP2132142B1

28. 3. 2008

Jožef Stefan Institute [SI]

Adolf Jesih, Aleš Mrzel, Maja Remškar, Marko Viršek

A Process for the Synthesis of Nanotubes and Fullerene-Like Nanostructures of Transition Metals Dichalcogenides, Quasi One-Dimensional Structures of Transition Metals and Oxides of Transition Metals

https://worldwide.espacenet.com/patent/search/family/039808813/publication/EP2132142B1?q=EP2132142B1

Extended patent application

SI2132142T1

28. 3. 2008

Jožef Stefan Institute [SI]

Adolf Jesih, Aleš Mrzel, Maja Remškar, Marko Viršek

Postopek za sintezo nanocevk in fulerenom podobnih nanostruktur di-halkogenidov prehodnih kovin, kvazi enodimenzionalnih struktur prehodnih kovin in oksidov prehodnih kovin

https://worldwide.espacenet.com/patent/search/family/039808813/publication/SI2132142T1?q=si2008000023W

Extended patent application

US8007756B2

28. 3. 2008

Jožef Stefan Institute [SI]

Adolf Jesih, Aleš Mrzel, Maja Remškar, Marko Viršek

Process for the Synthesis of Nanotubes and Fullerene-Like Nanostructures of Transition Metals Dichalcogenides, Quasi One-Dimensional Structures of Transition Metals and Oxides of Transition Metals

https://worldwide.espacenet.com/patent/search/family/039808813/publication/US8007756B2?q=US8007756B2

2007

Procedure for Synthesis of Nanowires of Tungsten Oxide W5O14

SI22445A

26. 2. 2007

Jožef Stefan Institute [SI]

Adolf Jesih, Miha Kocmur, Maja Remškar, Marko Viršek

Procedure for Synthesis of Nanowires of Tungsten Oxide W5O14 [EN], Postopek za sintezo nitkastega volframovega oksida W5O14 [SL]

The subject of invention is the synthesis of nanowires of tungsten oxide W5O14 in the presence of nickel at temperatures under 1000 degrees Celsius. A procedure is presented for the synthesis of a highly homogeneous phase of the compound W5O14 from the vapour phase in the presence of nickel according to the method of chemical transport in a sealed quartz vial. As the second embodiment, a procedure is presented for the synthesis of the compound W5O14 in a flow- through reaction vessel. In both procedures, electrically conductive nanowire crystals of the compound W5O14 are obtained. The synthesis is taking place in the vapour phase with tungsten entering the reaction as a pure phase or via WS2 +/- x, where x is approximately 0, synthesised previously from elements and/or tungsten source may also be tungsten oxides WO3-y, where y is between 0 and 1, and nickel may enter the reaction via NiJ2, Ni(OH)2 and/or as atomic nickel.

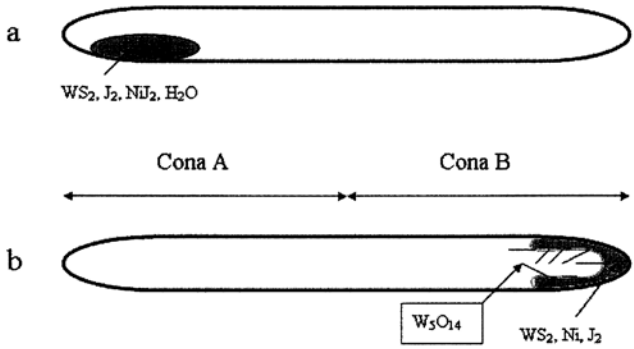

Nanotechnology and New Materials

Physical and exact sciences

Industrial products

https://worldwide.espacenet.com/patent/search/family/039686704/publication/SI22445A?q=si22445

UIL RS

Extended patent application

AT498585T

22. 2. 2008

Jožef Stefan Institute [SI]

Adolf Jesih, Miha Kocmur, Maja Remškar, Marko Viršek

Verfahren zur Synthese von Fadenartigem Wolframoxid W5O14

https://worldwide.espacenet.com/patent/search/family/039686704/publication/AT498585T?q=AT498585T

Extended patent application

EP2114827B1

22. 2. 2008

Jožef Stefan Institute [SI]

Adolf Jesih, Miha Kocmur, Maja Remškar, Marko Viršek

Procedure for the Synthesis of Threadlike Tungsten Oxide W5O14

https://worldwide.espacenet.com/patent/search/family/039686704/publication/EP2114827B1?q=EP2114827B1

Extended patent application

US8496907B2

22. 2. 2008

Jožef Stefan Institute [SI], Adolf Jesih [SI], Miha Kocmur [SI], Maja Remškar [SI], Marko Viršek [SI]

Adolf Jesih, Miha Kocmur, Maja Remškar, Marko Viršek

Procedure for the Synthesis of Threadlike Tungsten Oxide W5O14

https://worldwide.espacenet.com/patent/search/family/039686704/publication/US8496907B2?q=%20US8496907B2

Extended patent application

WO2008105745A3

22. 2. 2008

Jožef Stefan Institute [SI], Adolf Jesih [SI], Miha Kocmur [SI], Maja Remškar [SI], Marko Viršek [SI]

Adolf Jesih, Miha Kocmur, Maja Remškar, Marko Viršek

Procedure for the Synthesis of Threadlike Tungsten Oxide W5O14

https://worldwide.espacenet.com/patent/search/family/039686704/publication/WO2008105745A3?q=WO2008105745A3

Procedure of Synthesis of Nanotubes and Fullerene-Similar Nanostructures of Dichalcogenides

SI22485A

30. 3. 2007

Jožef Stefan Institute [SI]

Adolf Jesih, Aleš Mrzel, Maja Remškar, Marko Viršek

Postopek za sintezo nanocevk in fulerenom podobnih nanostruktur dihalkogenidov prehodnih kovin [SL], Procedure of Synthesis of Nanotubes and Fullerene-Similar Nanostructures of Dichalcogenides [EN]

The subject of the invention is a procedure for the synthesis of nanotubes of dichalcogenides of transition elements, fullerene- similar nanostructures of dichalcogenides of transition elements and nanotubes of dichalcogenides of transition elements, filled with fullerene-similar nanostructures of dichalcogenides of transition elements. The procedure is characteristic in that the synthesis is run via chemical transformation of quasi-one-dimensional materials composed of nanowires with a diameter under one micrometre, described by the formula M6CyHz, such that 8,2 is less than (y+z) which is less than 10, where M is a transition metal (Mo, W, Ta, Nb), C is a chalcogen (S, Se, Te) and H is a halogen (I).

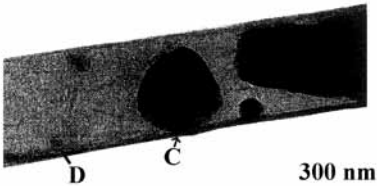

Nanotechnology and New Materials

Physical and exact sciences

Industrial products, Other

https://worldwide.espacenet.com/patent/search/family/039889189/publication/SI22485A?q=si22485

UIL RS

Procedure for Synthesis of Quasi One-Dimensional Structures of Dichalcogenides and Transition Metal Oxides

SI22623A

25. 9. 2007

Jožef Stefan Institute [SI]

Adolf Jesih, Aleš Mrzel, Maja Remškar, Marko Viršek

Postopek za sintezo kvazi enodimenzionalnih struktur dihalkogenidov in oksidov prehodnih kovin [SL], Procedure for Synthesis of Quasi One-Dimensional Structures of Dichalcogenides and Transition Metal Oxides [EN]

The subject of invention is a procedure for synthesis of quasi one-dimensional structures, i.e. nanowires, microwires and tapes of metal oxides of transition metals and quasi one-dimensional structures of transition metal dichalcogenides composed of fine crystallites of transition metal dichalcogenides. The reaction is run by the chemical reaction of quasi one-dimensional materials consisting of nanowires with a diameter below one micrometre, described with the formula M6CyHz, where y+z is greater than 8.2 and smaller or equal to 10, where M is a transition metal (Mo,W, Ta, Nb), C is a chalcogen (S, Se, Te)and H is a halogen (I), where the said quasi one- dimensional material is first heated in the air or otherwise in the presence of oxygen at an elevated temperature and is transformed into quasi one-dimensional metal oxides of transition metals, described with the formula MOx, where x is greater than 0.3 and smaller or equal to 3, where M is a transition metal (Mo,W, Ta, Nb) and O is oxygen; then a chemical transformation of the said quasi one-dimensional metal oxides follows in a quartz tube with a gas comprising an active reagent containing a chalcogen; the transformation takes place at an elevated temperature at which the active regent, containing a chalcogenide, exists in the vapour phase.

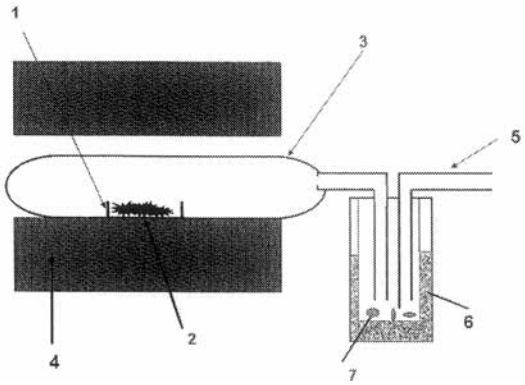

Nanotechnology and New Materials

Physical and exact sciences

Industrial products, Other

https://worldwide.espacenet.com/patent/search/family/040586547/publication/SI22623A?q=si22623

UIL RS

Procedure of Application of Adhesive Coating to Substrate

SI22527A

28. 6. 2007

Jožef Stefan Institute [SI]

Peter Jevnikar, Andraž Kocjan, Tomaž Kosmač, Kristoffer Krnel

Postopek nanosa adhezijske prevleke na substrat [SI], Procedure of Application of Adhesive Coating to Substrate [EN]

The subject of invention is a procedure of application of an adhesive coating to a substrate, preferentially a dental prosthetic product or bone implant, by precipitation of aluminium hydroxides, formed by hydrolysis of aluminium nitride (AlN) powder in a water suspension or in a suspension containing water, and by subsequent thermal treatment. The application is intended to improve the adhesion of commercial dental and/or bone cements to the substrate which serves as a dental prosthetic product or bone implant preferentially. Sintered ceramics from tetragonal zirconium oxide, aluminium oxide, spinel, mullite or any other biocompatible inorganic material, applicable as dental material or material for bone implants, is used for the substrate, then the latter is immersed into water containing aluminium nitride (AlN) powder, where the synthesis of the coating takes place by precipitation of aluminium oxides formed by hydrolysis of AlN powder in water suspension. Then the substrate is withdrawn from the suspension, dried and exposed to thermal treatment at an elevated temperature.

/

Nanotechnology and New Materials

Biological sciences

Medical / health related, Consumer related

https://worldwide.espacenet.com/patent/search/family/039944508/publication/SI22527A?q=si22527

UIL RS

Extended patent application

AT503453T

3. 6. 2008

Jožef Stefan Institute [SI]

Peter Jevnikar, Andraž Kocjan, Tomaž Kosmač, Kristoffer Krnel

Verfahren Zum Aufbringen Einer Adhäsionsschicht Auf Einem Substrat

https://worldwide.espacenet.com/patent/search/family/039944508/publication/AT503453T?q=pn%3DAT503453T

Extended patent application

WO2009002278A3

3. 6. 2008

Jožef Stefan Institute [SI], Peter Jevnikar [SI], Andraž Kocjan [SI], Tomaž Kosmač [SI], Kristoffer Krnel [SI]

Peter Jevnikar, Andraž Kocjan, Tomaž Kosmač, Kristoffer Krnel

Process for Applying Adhesion Coating to a Substrate

https://worldwide.espacenet.com/patent/search/family/039944508/publication/WO2009002278A3?q=WO2009002278A3

Extended patent application

US2010233351A1

3. 6. 2008

Data not available.

Peter Jevnikar, Andraž Kocjan, Tomaž Kosmač, Kristoffer Krnel

Process for Applying Adhesion Coating to a Substrate

https://worldwide.espacenet.com/patent/search/family/039944508/publication/US2010233351A1?q=pn%3DUS2010233351A1

Extended patent application

EP2170244B1

3. 6. 2008

Jožef Stefan Institute [SI]

Peter Jevnikar, Andraž Kocjan, Tomaž Kosmač, Kristoffer Krnel

Process for Applying Adhesion Coating to a Substrate

https://worldwide.espacenet.com/patent/search/family/039944508/publication/EP2170244B1?q=EP2170244B1

Procedure of Preparation of Magnetic Nanocomposites with High Content of Nanoparticles Dispersed in Polymer Matrix

SI22539A

24. 5. 2007

Jožef Stefan Institute [SI]

Mihael Drofenik, Sašo Gyergyek, Miroslav Huskić, Darko Makovec

Postopek priprave magnetnih nanokompozitov z visoko vsebnostjo nanodelcev dispergiranih v polimerni matrici [SL], Procedure of Preparation

of Magnetic Nanocomposites with High Content of Nanoparticles Dispersed in Polymer Matrix [EN]

The subject of invention is a procedure of preparation of a magnetic nanocomposite which contains a high content of dispersed nanoparticles within a polymethyl metacrylate matrix. Magnetic nanocomposites are applied on various fields of electrical engineering, for example as absorbers of high frequency electromagnetic waves. The procedure is based on the preparation of a concentrated colloidal suspension of previously synthesised magnetic nanoparticles in a nonpolar carrier liquid. A monomer and suitable initiator are dissolved in the carrier liquid of this suspension. A polymer in which magnetic nanoparticles are dispersed is isolated during the precipitation polymerisation. The content of nanoparticles is controlled by the ratio between the content of dissolved monomer and the content of suspended nanoparticles.

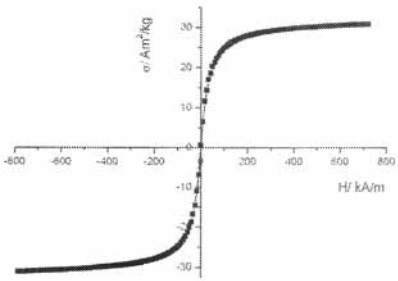

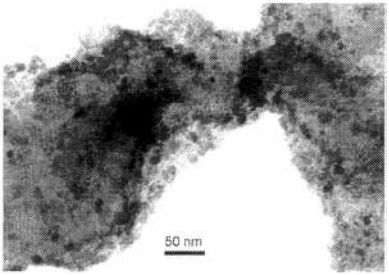

Nanotechnology and New Materials

Electronics, IT and telecoms, Industrial manufacturing, material and transport

Other electronics related

https://worldwide.espacenet.com/patent/search/family/040184801/publication/SI22539A?q=si22539

UIL RS

Alumina Porcelain for Electrical Engineering and Procedure of Its Manufacture

SI22541A

12. 6. 2007

ETI Elektroelement d. d. [SI], Jožef Stefan Institute [SI]

Marjan Buh, Janez Holc, Vlasta Imperl, Martina Oberžan

Glinični porcelan za elektrotehniko in postopek njegove izdelave [SL], Alumina Porcelain for Electrical Engineering and Procedure of Its Manufacture [EN]

The subject of invention is alumina porcelain for electrical engineering and the procedure for its manufacture. Technical porcelain according to the invention belongs to the group of high mechanical strength alkaline alumosilicate porcelains. The alumina porcelain according to the invention has the following chemical composition (mass %): from 58 to 62 % aluminium oxide, from 0,3 to 0,6 % iron oxide, from 0,1 to 0,3 % sodium oxide, from 1,5 to 2,5 % potassium oxide and from 0,8 to 1,2 % lithium oxide. The total content of iron oxide is lower than 0,5 %. Ceramic material is fired in the temperature range from 1280 to 1320 degrees Celsius for 1 to 4 fours. Ceramic material with the said composition and prepared according to the procedure described exhibits a higher flexural strength than 200 MPa. Surface glazed ceramic material prepared according to the procedure described exhibits a higher flexural strength than 240 MPa.

/

Nanotechnology and New Materials

Industrial manufacturing, material and transport

Industrial products

https://worldwide.espacenet.com/patent/search/family/040184803/publication/SI22541A?q=si22541

UIL RS

2006

Ceramic Material, Sintered Ceramic and Component Made Therefrom, Production Method and Use of the Ceramic

DE102006024231A1

23. 5. 2006

Epcos AG [DE]

Pavol Dudesek, Christian Hoffmann, Danilo Suvorov, Matjaž Valant

Ceramic Material, Sintered Ceramic and Component Made Therefrom, Production Method and Use of the Ceramic [EN], Keramisches Material, gesinterte Keramik und Bauelement daraus, Verfahren zur Herstellung und Verwendung der Keramik [DE]

Es wird ein keramisches Mischsystem vorgeschlagen, bestehend aus einem Zwei-Phasengemisch der Reinkomponenten A und B, wobei die Phase A auf der kubischen bis tetragonalen Modifikation von Bi₃NbO₇ und die Phase B auf der monoklinen Pyrochlormodifikation von Bi₂(Zn_{2/3}Nb_{4/3})O₇ beruht. Die elektrischen Eigenschaften daraus hergestellter keramischer Körper machen das Material für Bauelemente geeignet, die Mehrschichtstruktur aufweisen, in die Kapazitäten und Induktivitäten integriert sind und die in der Datenverarbeitung oder Signalverarbeitung eingesetzt werden können.

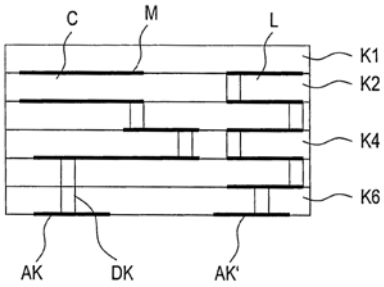

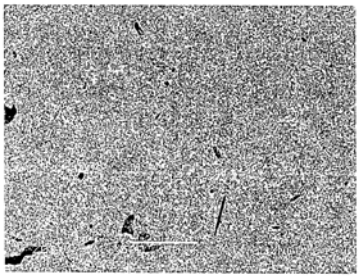

Nanotechnology and New Materials

Industrial manufacturing, material and transport, Electronics, IT and telecoms

Industrial products, Computer related, Other

https://worldwide.espacenet.com/patent/search/family/038622130/publication/DE102006024231B4?q=%20DE102006024231B4

DPMA

Extended patent application

CN101448759A

9. 5. 2007

Epcos AG [DE]

Pavol Dudesek, Christian Hoffmann, Danilo Suvorov, Matjaž Valant

Ceramic Material, Sintered Ceramic and Component Made Therefrom, Production Method and Use of the Ceramic

https://worldwide.espacenet.com/patent/search/family/038622130/publication/CN101448759A?q=pn%3DCN101448759A

Extended patent application

WO2007134569A3

9. 5. 2007

Pavol Dudesek [AT], Epcos AG [DE], Christian Hoffmann [AT], Danilo Suvorov [SI], Matjaž Valant [SI]

Pavol Dudesek, Christian Hoffmann, Danilo Suvorov, Matjaž Valant

Ceramic Material, Sintered Ceramic and Component Made Therefrom, Production Method and Use of the Ceramic

https://worldwide.espacenet.com/patent/search/family/038622130/publication/WO2007134569A3?q=WO2007134569A3

Extended patent application

JP5647412B2

9. 5. 2007

Epcos AG [DE]

Pavol Dudesek, Christian Hoffmann, Danilo Suvorov, Matjaž Valant

Ceramic Material, Sintered Ceramic and Component Made Therefrom, Production Method and Use of the Ceramic

https://worldwide.espacenet.com/patent/search/family/038622130/publication/JP5647412B2?q=JP5647412B2

Extended patent application

KR101339090B1

9. 5. 2007

EPCOS AG [DE]

Pavol Dudesek, Christian Hoffmann, Danilo Suvorov, Matjaž Valant

Ceramic Material, Sintered Ceramic and Component Made Therefrom, Production Method and Use of the Ceramic

https://worldwide.espacenet.com/patent/search/family/038622130/publication/KR101339090B1?q=KR101339090B1

Extended patent application

TWI400214B

17. 5. 2007

EPCOS AG [DE]

Pavol Dudesek, Christian Hoffmann, Danilo Suvorov, Matjaž Valant

Ceramic Material, Sintered Ceramic and Component Made Therefrom, Production Method and Use of the Ceramic

https://worldwide.espacenet.com/patent/search/family/038622130/publication/TWI400214B?q=TWI400214B

Extended patent application

US7816293B2

21. 11. 2008

EPCOS AG [DE]

Pavol Dudesek, Christian Hoffmann, Danilo Suvorov, Matjaž Valant

Ceramic Material, Sintered Ceramic and Component Made Therefrom, Production Method and Use of the Ceramic

https://worldwide.espacenet.com/patent/search/family/038622130/publication/US7816293B2?q=%20US7816293B2

Process of Hydprophobization of Ceramic Powder by Application of Organic Coating in Water Suspension

SI22211A

19. 1. 2006

Jožef Stefan Institute [SI], Hidria AET d. o. o. [SI]

Katja Mejak, Saša Novak Krmpotič, Stojana Veskovič Bukudur

Postopek hidrofobiziranja keramičnega prahu z nanosom organske prevleke v vodni suspenziji [SL], Process of Hydprophobization of Ceramic Powder by Application of Organic Coating in Water Suspension [EN]

The subject of invention is a process of hydrophobization of ceramic powder by application of a thin organic coating onto ceramic powder particles in a water suspension intended for injection moulding. In the process of hydrophobization of ceramic powder by application of an organic coating in a water suspension, a water suspension of ceramic powder is pre-

pared, to which from 0,1 to 2 wt. % of carboxylic acid salt is added. Then the suspension is homogenized and the liquid evaporated during stirring. The dried out powder is heated at a temperature above 90 degrees Celsius for at least 10 minutes. The hydrophobization of ceramic powder enables the preparation of a powder which does not get moist in a humid environment as well as the preparation of paraffin suspensions of ceramic powder with a higher powder content and low viscosity not affected by the presence of moisture in the environment.

/

Nanotechnology and New Materials

Other industrial technologies

Industrial products, Other

https://worldwide.espacenet.com/patent/search/family/038288031/publication/SI22211A?q=si22211

UIL RS

Extended patent application

WO2007084084A3

10. 1. 2007

Hidria AET d. o. o. [SI], Jožef Stefan Institute [SI], Katja Mejak [SI], Saša Novak Krmpotič [SI], Stojana Vesković-Bukudur [SI]

Katja Mejak, Saša Novak Krmpotič, Stojana Veskovič Bukudur

A Method for Hydrophobisation of a Ceramic Powder by Applying an Organic Coating in an Aqueous Suspension

https://worldwide.espacenet.com/patent/search/family/038288031/publication/WO2007084084A3?q=WO2007084084A3

Procedure for Manufacture of Dense Ceramics Based on Niobates and Niobates-Tantalates of Alkaline Elements

SI22380A

26. 10. 2006

Jožef Stefan Institute [SI]

Janez Bernard, Janez Holc, Marija Kosec, Barbara Malič

Postopek za izdelavo goste keramike na osnovi niobatov in niobatov tantalatov alkalijskih elementov [SI], Procedure for Manufacture of Dense Ceramics Based on Niobates and Niobates-Tantalates of Alkaline Elements [EN]

The subject of invention is the procedure of preparation of dense ceramics from niobates and niobates-tantalates of alkaline elements with addition of potassium and sodium germanate. The ratio of potassium to sodium germanate is optional, however preferentially the same as the ratio of potassium to sodium in niobate-tantalate of alkaline elements, and the quantity of additive is in the range of 0.1 to 10 weight %. The mole ratio of K/Ge to Na/Ge within the potassium and sodium germanate additive lies between 2/2 and 1/2. The niobate and alkaline element niobate-tantalate powders are mixed, potassium and sodium germanate are added, the mixture is wet-ground, the suspension dried out and the powder pressed into shapes and fired at a temperature between 950 and 1500 degrees Celsius for 1 to 24 hours. Density of ceramics amounts to more than 95 % of its theoretical value.

/

Nanotechnology and New Materials

Industrial manufacturing, material and transport

Industrial products, Other

https://worldwide.espacenet.com/patent/search/family/039356821/publication/SI22380A?q=si22380

UIL RS

Thick Layer Structures of Lead Perovskites on Reactive Ceramics and Their Manufacturing Process

SI22401A

26. 10. 2006

Jožef Stefan Institute [SI]

Silvo Drnovšek, Janez Holc, Marija Kosec

Debeloplastne strukture svinčevih perovskitov na reaktivni keramiki in postopek izdelav [SL], Thick Layer Structures of Lead Perovskites on Reactive Ceramics and Their Manufacturing Process [EN]

The subject of invention are ferroelectric and piezoelectric structures on a reactive ceramic substrate, excelling in good functional properties and simple execution. The invention takes advantage of adhesion of lead perovskites to a reactive ceramic substrate and to noble metals. An intermediate layer (2) of lead perovskites is applied to the substrate (1) of reactive ceramics, followed by an electrode (3) made of a noble metal or a noble metal alloy and finally by an active layer (4) of WO2005040842A1 lead perovskites, optionally with a low-melting additive.

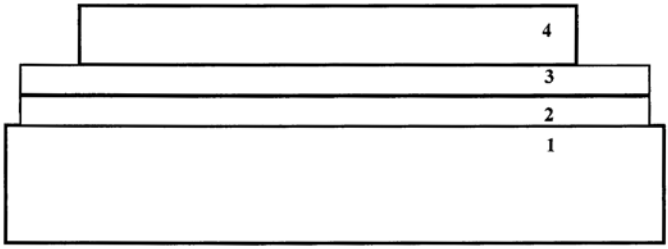

Nanotechnology and New Materials

Industrial manufacturing, material and transport

Industrial products, Other electronics related

https://worldwide.espacenet.com/patent/search/family/039356838/publication/SI22401A?q=si22401

UIL RS

2005

Method and Device for Local Functionalization of Polymer Materials

SI22048A

2. 6. 2005

Jožef Stefan Institute [SI]

Uroš Cvelbar, Miran Mozetič, Alenka Vesel

Metoda in naprava za lokalno funkcionalizacijo polimernih materialov [SL], Method and Device for Local Functionalization of Polymer Materials [EN]

Subject of the invention is a method for partial or complete change of functional groups on the surface of polymer or polymer containing materials in combination with plasma functionalization and localised thermal defunctionalization. The surface of materials is first subjected to cold plasma, which provides the correct functionalisation of the polymer. Following the plasma treatment, the surface is locally heated by any method, preferably by a jet of electrons which results in a local defunctionalization at the hot spot. By conducting the jet of electrons across the surface of the material, any distribution of the functional groups across the surface of the material can be generated. Subject of the invention is also a device which facilitates the implementation of such processing.

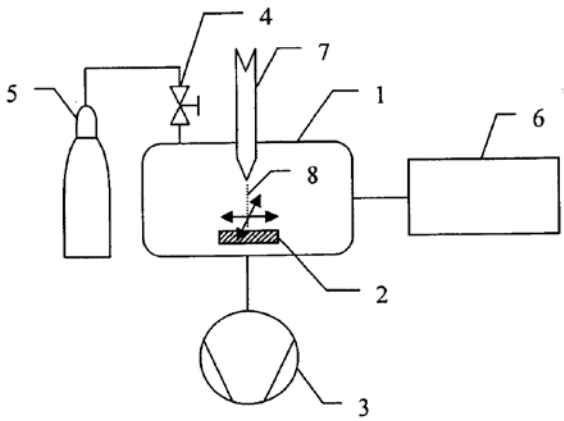

Nanotechnology and New Materials

Physical and exact sciences, Other industrial technologies

Industrial products, Other

https://worldwide.espacenet.com/patent/search/family/037012129/publication/SI22048A?q=si22048

UIL RS

Extended patent application

DE112006001297T5

16. 5. 2006

Jožef Stefan Institute [SI]

Uroš Cvelbar, Miran Mozetič, Alenka Vesel

Verfahren und Vorrichtung zur lokalen Funktionalisierung von Polymermaterialien

https://worldwide.espacenet.com/patent/search/family/037012129/publication/DE112006001297T5?q=DE112006001297T5

Extended patent application

US8247039B2

16. 5. 2006

Jožef Stefan Institute [SI], Uroš Cvelbar [SI], Miran Mozetič [SI], Alenka Vesel [SI]

Uroš Cvelbar, Miran Mozetič, Alenka Vesel

Method and Device for Local Functionalization of Polymer Materials

https://worldwide.espacenet.com/patent/search/family/037012129/publication/US8247039B2?q=US8247039B2

Extended patent application

WO2006130122A1

9. 5. 2006

Jožef Stefan Institute [SI], Uroš Cvelbar [SI], Miran Mozetič [SI], Alenka Vesel [SI]

Uroš Cvelbar, Miran Mozetič, Alenka Vesel

Method and Device for Local Functionalization of Polymer Materials

https://worldwide.espacenet.com/patent/search/family/037012129/publication/WO2006130122A1?q=WO2006130122A1

Thick-Layer Piezo-Resistive Pressure Sensor with Freestanding Diaphragm

SI22106A

18. 7. 2005

HYB d. o. o. [SI], Jožef Stefan Institute [SI]

Darko Belavič, Marko Hrovat, Marko Pavlin, Marina Santo Zarnik

Debeloplastni piezouporovni senzor tlaka s prosto stoječo membrano [SL], Thick-Layer Piezo-Resistive Pressure Sensor with Freestanding Diaphragm [EN]

The present invention relates to a thick-layer piezo-resisitve pressure sensor with freestanding diaphragm, made in such a way that the diaphragm inside the enclosure is from one side supported by a supporting ring from hard material, which defines the diameter of the active surface of the diaphragm, and on the other side at the edge of the active surface it is supported by an elastic washer. The washer maintains the shape of a ring, which is of equal diameter than the supporting ring so that both rings together form a flexible fixing of the diaphragm, while upon exposure to pressure the deformation of the diaphragm due to the fixing can be neglected and small specific deformation of the diaphragm are most explicit in its central part. In the area of the largest diaphragm deformation there are on both sides of the diaphragm on each side two symmetrical thick-layer resistors featuring explicit piezo-resistive properties. Upon exposure

to pressure these two resistors are expanded, while the two other ones are contracting, therefore the resistivity of the first pair is increasing and that of the second ones decreasing. All four resistors are via conductive links and terminal pads connected to a Wheatston bridge. With equal exposure to pressure such a construction features larger mechanical deformation levels than in cases when the diaphragm is attached to a support, which results in enhanced pressure sensitivity of the sensor.

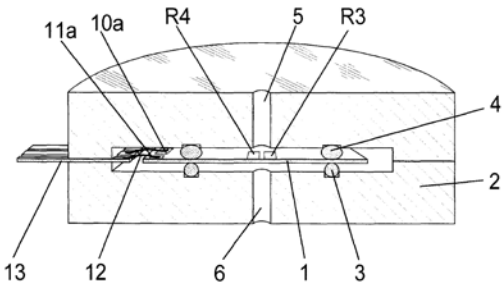

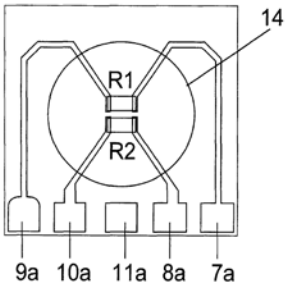

Nanotechnology and New Materials

Electronics, IT and telecoms, Measurements and standards

Other electronics related, Industrial products

https://worldwide.espacenet.com/patent/search/family/037774964/publication/SI22106A?q=si22106

UIL RS

Ceramic Ferrite Based Materials for the Absorption of Electromagneticwaves Within the Frequency Range Between 100 MHz and 12 GHz

SI21979A

14. 2. 2005

Iskra feriti d. o. o. [SI]

Vladimir Bregar Boštjan, Miha Drofenik, Darja Lisjak, Nevenka Rajnar

Keramični feritni materiali za absorbcijo elektromagnetnega valovanja v frekvenčnem območju od 100 MHz do 12 GHz [SL], Ceramic Ferrite Based Materials for the Absorption of Electromagneticwaves Within the Frequency Range Between 100 MHz and 12 GHz [EN]

The submitted invention deals with ceramic ferrite based materials for the absorption of electromagnetic waves within the frequency range between 100 MHz and 12 GHz, measured on toroidal ferritic cores with an external diameter of 7 mm, an internal diameter of 3 mm and a height of 3 mm made from oxides of iron, zinc, nickel, copper, bismuth, cobalt and barium carbonate, characterised by the fact that the contents features the following mole percentages: Fe2O3 = 50 - 90 mol %; NiO = 15 - 50 mol %; ZnO = 0 - 35 mol %; CuO = 0 - 25 mol %; Bi2O3 = 0 - 10 mol %; CoO = 0 - 20 mol %; BaCO3 = 0 - 30 mol %. The final electromagnetic properties are defined by the share of the basic components of oxide materials and the carbonates, the corresponding manufacturing conditions of the ceramic ferrite powder and conditions of high-temperature sintering. The ceramic ferrite materials for the absorption of the electromagnetic waves within the frequency range between 100 MHz and 12 GHz manufactured in different shapes and sizes of ceramic ferrite based products, thin-layer foils and combinations with various organic composites, absorb the electromagnetic waves within the frequency range of the ferromagnetic resonance. The ceramic ferrite based materials represent strategic materials for the application in telecommunication technologies of the new generation for the protection against interference between different telecommunication systems and for the protection of people and residential premises against unwanted and health hazardous electromagnetic waves.

/

Nanotechnology and New Materials

Electronics, IT and telecoms

Communications, Consumer related, Other electronics related

https://worldwide.espacenet.com/patent/search/family/036951078/publication/SI21979A?q=si21979

UIL RS

Foil Absorber of Electromagnetic Ripple in The Frequency Range of Up to 12 GHz

SI22031A

19. 4. 2005

Iskra feriti d. o. o. [SI]

Vladimir Boštjan Bregar, Nevenka Rajnar, Andrej Žnidaršič

Folijski absorberji elektromagnetnega valovanja v frekvenčnem območju do 12 GHz [SL], Foil Absorber of Electromagnetic Ripple in The Frequency Range of Up to 12 GHz [EN]

The submitted invention refers to ceramic ferrite materials, which are in combination with various saturated and non-saturated organic components the basis for producing foils of 10 micro to 10 mm by applying the technology of foil pouring, aimed at absorbing electromagnetic ripple within the frequency range of up to 12 GHz, measured at the toroid ferrite core, cut from ferrite foil of 100 x 100 x 3 mm and 7 mm external diameter, 3 mm internal diameter and 3 mm height from iron, zinc, nickel, manganese, copper, bismuth, cobalt oxides and barium carbonate with typical contents expressed in mole percentage of: Fe_2O_3 = 50 - 90 mol %; NiO = 15 - 50 mol %; ZnO = 0 - 35 mol %; CuO = 0 - 25 mol %; Bi_2O_3 = 0 - 10 mol %; CoO = 0 - 20 mol %; $BaCO_3$ = 0 - 30 mol %; MnO = 15 - 35 mol %. The final electromagnetic properties are determined by the share of basic components of oxide materials and carbonates, the corresponding production conditions of the ceramic ferrite powder as well as the condition upon high-temperature sintering. The ceramic ferrite powder for the production of foil absorbers of electromagnetic ripple within the frequency range of up to 12 GHz produced in various shapes and thickness of thin-layer foils absorbs the electromagnetic ripple within the range of ferromagnetic resonance. The ceramic ferrite type of materials for the production of foil absorbers by applying the technology of foil pouring represent a strategic material for the application in new genera-

tion telecommunication technologies, for the protection against interference between various telecommunication systems as well as protection of people and residential areas against unwanted and health-hazardous electromagnetic ripple.

/

Nanotechnology and New Materials

Electronics, IT and telecoms

Communications, Consumer related, Other electronics related

https://worldwide.espacenet.com/patent/search/family/037459601/publication/SI22031A?q=si22031

UIL RS

2004

Procedure for Production of Complex Lead Perovskites

SI21797A

12. 5. 2004

Jožef Stefan Institute [SI]

Andrej Degen, Silvo Drnovšek, Janez Holc, Marija Kosec, Barbara Malič

Postopek za proizvodnjo kompleksnih svinčevih perovskitov [SL], Procedure for Production of Complex Lead Perovskites [EN]

The subject of invention is the preparation of powders of complex lead perovskites from metal oxides or other compounds in water suspensions under pH value control or by addition of a flocculant to a suspension and firing of a dried-out suspension. The procedure for production of complex lead perovskites according to the invention is characterised in the case of synthesis of PMN (lead magnesium niobate Pb(Mg1/3Nb2/3)O3) or PMN-PT (lead magnesium niobate - lead titanate PbTiO3) in that pH of water suspension of mixture of powders PbO, Nb2O5 and Mg2(OH)2CO3 or PbO, Nb2O5, Mg2(OH)2CO3 and TiO2 is between 10,0 and 12,5 and in that from 1 up to 70 mass % of solid material are dispersed and in that the suspension is dried out after grinding or in that 0,1 to 0,5 weight % of a polyacrylamide flocculant is added to the mixture of powders PbO, Nb2O5 and Mg2(OH)2CO3 or PbO, Nb2O5, Mg2(OH)2CO3 and TiO2 and in that from 1 up to 70 mass % of solid material are dispersed and in that the suspension is dried out after grinding and in that the dried-out powder is fired on air at a temperature between 800 degrees and 900 degrees Celsius to obtain a PMN and a PMN-PT perovskite phase which is then ground again and sintered at the temperature of 1200 degrees Celsius.

/

Nanotechnology and New Materials

Industrial manufacturing, material and transport

Industrial products, Other

https://worldwide.espacenet.com/patent/search/family/035745009/publication/SI21797A?q=si21797

UIL RS

Procedure for Production of High-Density KNN (K0.5Na0.5NbO3) Ceramics

SI21798A

12. 5. 2004

Jožef Stefan Institute [SI]

Janez Bernard, Janez Holc, Marija Kosec, Barbara Malic

Postopek za proizvodnjo KNN (K0.5Na0.5NbO3) keramike visoke gostote [SL], Procedure for Production of High-Density KNN (K0.5Na0.5NbO3) Ceramics [EN]

The subject of invention is the preparation of high-density potassium sodium niobate ceramics (K0.5Na0.5NbO3) from the double salt potassium sodium tartrate hydrate and niobium oxide by firing. Niobium oxide (Nb2O5) and potassium sodium tartrate hydrate (KNaC4H4O6x4H2O) are mixed in the molar ratio 1:1, the mixture with acetone is wet ground for 4 - 6 hours, the suspension is dried out and calcined by firing at a temperature from 650 up to 850 degrees Celsius for 1 to 8 hours, the powder is wet ground with acetone again for 4 to 6 hours down to the particle size of 0,5 to 1 micrometer and dried out, pressed into shapes at a pressure from 50 to 500 MPa and sintered for 1 to 4 hours at 1115 to 1125 degrees Celsius.

/

Nanotechnology and New Materials

Electronics, IT and telecoms, Industrial manufacturing, material and transport

Other electronics related, Industrial products

https://worldwide.espacenet.com/patent/search/family/035745010/publication/SI21798A?q=si21798

UIL RS

Hybrid Surface-Mount Thick-Film Module for the Protection of Telecommunication Lines

SI21770A

2. 4. 2004

HYB d. o. o. [SI]

Janez Gramc, Sandi Kocjan, Darko Pavlin, Marina Santo Zarnik, Alojz Simončič

Hibridni debeloplastni modul za zaščito telekomunikacijske linije v izvedbi za površinsko montažo [SL], Hybrid Surface-Mount Thick-Film Module for the Protection of Telecommunication Lines [EN]

The invention relates to a hybrid thick-film module for the current and surge protection of a telecommunication line as a surface-mount element based on two ceramic substrates, where a pair of symmetrically located protection circuits are provided featuring thermocoupled thick-film resistors and discrete PCT thermistor-based switching elements as well as high-voltage protection resistors and varistors. The substrates are via surface-mount PCT elements mechanically and electrically connected into a thermally interconnected structure, so that the PCT elements from one side are attached by conductive glue to the thick-film substrate for surge protection and on the other side to a double-sided hybrid thick-film circuit with thick-film positive resistors, where upon thermal overload the thermal energy is released, which is heating the PCT switching elements. As soon as the switching temperature limit is exceeded, the current through the protection module is limited. Upon lightning impact the protection is provided through specially designed high-voltage thick-film resistors and the two varistors, which additionally enhance the surge protection.

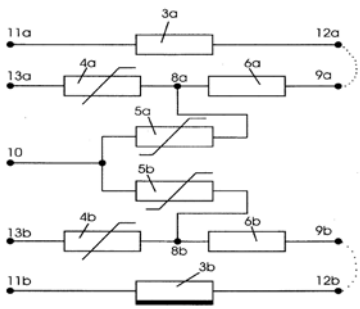

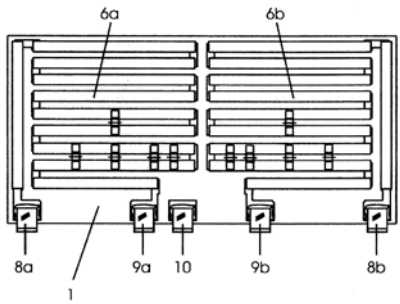

Nanotechnology and New Materials

Electronics, IT and telecoms

Communications, Other electronics related

https://worldwide.espacenet.com/patent/search/family/035265811/publication/SI21770A?q=si21770

UIL RS

Small Ceramic Piston for Hydraulic Brakes

SI21859A

21. 7. 2004

Jožef Stefan Institute [SI], MS Production Miklavž Zornik s.p. [SI]

Aleš Dakskobler, Tomaž Kosmač, Zmagoslav Stadler

Keramični batek za hidravlične zavore [SL], Small Ceramic Piston for Hydraulic Brakes [EN]

The subject of the invention is a small piston for hydraulic brakes, preferably for vehicles, manufactured from transformation stabilised mullite ceramic (ZTM ceramic), consisting of a mullite matrix and dispersed parts of predominantly tetragonal ZrO2. The piston according to the invention protects the brake cheeks and hydraulic fluid within them against overheating, is resistant to quick temperature changes, and it does not break with catastrophic destruction upon mechanical and/or thermal overloads. This way it enables effective and safe operation of the braking system upon aggressive and long braking, which is provided by modern braking systems. The piston according to the invention is made in such a way that the synthetic mullite powder, made either by remelting sintering, coprecipitation, salt-gel reaction or any other reaction in solid, liquid or gas form, and ZrO2 powder, eventually doped with Y2O3 or CeO2 or any other oxide stabilizing the ZrO2 tetragonal phase, are used as basic raw materials, or a mixture of constituents in corresponding mole proportions or their compounds along with natural minerals, which during sintering react upon generation of mulllite and ZrO2, which can be doped by Y2O3 or CeO2 or any other oxide stabilizing the ZrO2 tetragonal phase; for preparing stock any known procedure of dry, wet or plastic processing like pressing, casting, spraying, extrusion with subsequent mechanical processing can be applied, while after processing the samples are dried

or the organic additives, required for processing are removed from them, and sintered at temperatures, when such type of ceramics thickens to sealed porosity or maximum relative thickness.

/

Nanotechnology and New Materials

Industrial manufacturing, material and transport

Industrial products

https://worldwide.espacenet.com/patent/search/family/035457721/publication/SI21859A?q=si21859

UIL RS

Extended patent application

WO2006009522A1

14. 7. 2005

Jožef Stefan Institute [SI], Aleš Dakskobler [SI], Tomaž Kosmač [SI], MS Production Miklavž Zornik s. p. [SI], Zmagoslav Stadler [SI]

Aleš Dakskobler, Tomaž Kosmač, Zmagoslav Stadler

Ceramic Piston for Hydraulic Brakes

https://worldwide.espacenet.com/patent/search/family/035457721/publication/WO2006009522A1?q=%20WO2006009522A1

2003

Quasi-One-Dimensional Polymers Based on the Metal-Chalcogen-Halogen System

EP1541528A1

8. 12. 2003

Jožef Stefan Institute [SI]

Adolf Jesih, Dragan Mihailović, Aleš Mrzel, Maja Remškar, Daniel Vrbanić

Quasi-One-Dimensional Polymers Based on the Metal-Chalcogen-Halogen System

The present invention relates a quasi-one-dimensional material with sub-micron cross-section described by the formula M6CyHz, where the M = transition metal, C = chalcogen, H = halogen, and where y and z are integers such that 8.2<y+z<10, which materials are synthesized in a single-step procedure at temperatures above 1000 °C. The present invention also concerns the use of these materials in electronic, chemical, optical or mechanical applications.

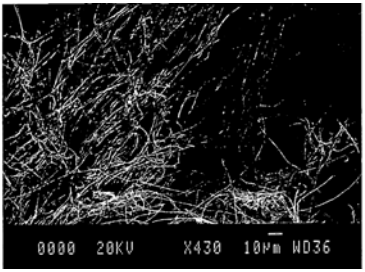

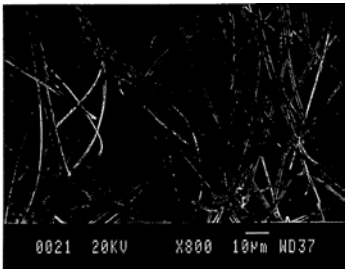

Nanotechnology and New Materials

Other industrial technologies, Physical and exact sciences

Industrial products, Other

https://worldwide.espacenet.com/patent/search/family/034486143/publication/EP1541528A1?q=EP1541528A1

EPO

Extended patent application

CA2548265A1

25. 2. 2004

Jožef Stefan Institute [SI]

Adolf Jesih, Dragan Mihailović, Aleš Mrzel, Maja Remškar, Daniel Vrbanić

Quasi-One-Dimensional Polymers Based on the Metal-Chalcogen-Halogen System

https://worldwide.espacenet.com/patent/search/family/034486143/publication/CA2548265A1?q=pn%3DCA2548265A1

Extended patent application

CN1890182A

25. 4. 2004

Jožef Stefan Institute [SI]

Adolf Jesih, Dragan Mihailović, Aleš Mrzel, Maja Remškar, Daniel Vrbanić

Quasi-One-Dimensional Polymers Based on the Metal-Chalcogen-Halogen System

https://worldwide.espacenet.com/patent/search/family/034486143/publication/CN1890182A?q=pn%3DCN1890182A

Extended patent application

US2007274895A1

25. 2. 2004

Jožef Stefan Institute [SI]

Adolf Jesih, Dragan Mihailović, Aleš Mrzel, Maja Remškar, Daniel Vrbanić

Quasi-One-Dimensional Polymers Based on the Metal-Chalcogen-Halogen System

https://worldwide.espacenet.com/patent/search/family/034486143/publication/US2007274895A1?q=%20US2007274895A1

Extended patent application

WO2005058758A1

25. 2. 2004

Jožef Stefan Institute [SI], Adolf Jesih [SI], Dragan Mihailović [SI], Aleš Mrzel [SI], Maja Remškar [SI], Daniel Vrbanić [SI]

Adolf Jesih, Dragan Mihailović, Aleš Mrzel, Maja Remškar, Daniel Vrbanić

Quasi-One-Dimensional Polymers Based on the Metal-Chalcogen-Halogen System

https://worldwide.espacenet.com/patent/search/family/034486143/publication/WO2005058758A1?q=pn%3DWO2005058758A1

Extended patent application

JP2007513050A

25. 2. 2004

Jožef Stefan Institute [SI]

Adolf Jesih, Dragan Mihailović, Aleš Mrzel, Maja Remškar, Daniel Vrbanić

Quasi-One-Dimensional Polymers Based on the Metal-Chalcogen-Halogen System

https://worldwide.espacenet.com/patent/search/family/034486143/publication/JP2007513050A?q=pn%3DJP2007513050A

Extended patent application

KR20060123431A

4. 7. 2006

Jožef Stefan Institute [SI]

Adolf Jesih, Dragan Mihailović, Aleš Mrzel, Maja Remškar, Daniel Vrbanić

Quasi-One-Dimensional Polymers Based on the Metal-Chalcogen-Halogen System

https://worldwide.espacenet.com/patent/search/family/034486143/publication/KR20060123431A?q=pn%3DKR20060123431A

Procedure of Preparation of Complex Perovskites by Mechanochemical Synthesis

SI21556A

17. 7. 2003

Jožef Stefan Institute [SI]

Silvo Drnovšek, Janez Holc, Marija Kosec, Barbara Malič

Postopek priprave kompleksnih perovskitov z mehanokemijsko sintezo [SL], Procedure of Preparation of Complex Perovskites by Mechanochemical Synthesis [EN]

The subject of invention is a procedure of preparation of complex perovskites by a mechanochemical synthesis in such a manner that the compound produced contains no other compounds and impurities originating from the mill construction material, which might affect functional prop-

erties of the prepared material. The invention takes advantage of rapid and easy formation of lead titanate with the perovskite structure, which enhances the formation of the complex perovskite during the phase of synthesis. Lead titanate can be prepared by a mechanochemical synthesis or in some other way.

/

Nanotechnology and New Materials

Industrial manufacturing, material and transport, Other industrial technologies

Industrial products, Other

https://worldwide.espacenet.com/patent/search/family/034225622/publication/SI21556A?q=si21556

UIL RS

Ferroelectric Thick-layer Structures on Reactive Ceramic

SI21585A

15. 7. 2003

Jožef Stefan Institute [SI]

Silvo Drnovšek, Janez Holc, Marko Hrovat, Marija Kosec

Feroelektrične debeloplastne strukture na reaktivni keramiki [SL], Ferroelectric Thick-layer Structures on Reactive Ceramic [EN]

The subjects of invention are ferroelectric thick-layer structures on a reactive ceramic substrate, excelling in good ferroelectric properties and simple execution. The invention takes advantage of a good bond strength of aluminium oxide to the reactive ceramic substrate and aluminium oxide to noble metals. According to the invention, the task is solved by an interlayer of unreactive aluminium oxide between the ceramic substrate and the electrode made of noble metals. The layer of aluminium oxide may contain an additive admixed to enable firing of the protective aluminium oxide layer at lower temperatures.

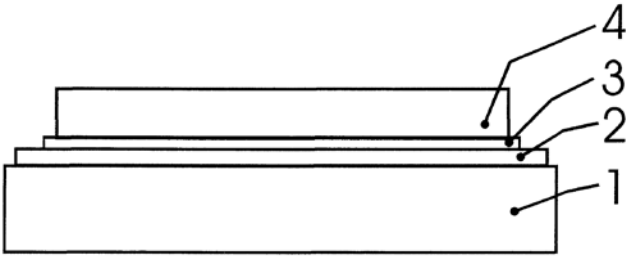

Nanotechnology and New Materials

Energy

Energy

https://worldwide.espacenet.com/patent/search/family/034225619/publication/SI21585A?q=si21585

UIL RS

Low Sinterable Ferroelectric Ceramics Based on Li2O Doped (Ba, Sr) TiO3

SI21615A

9. 9. 2003

Jožef Stefan Institute [SI]

Danilo Suvorov, Matjaž Valant

Nizkosinterabilna feroelektrična keramika na osnovi (Ba, Sr) TiO3 dopiranega z Li2O [SL], Low Sinterable Ferroelectric Ceramics Based on Li2O Doped (Ba, Sr) TiO3 [EN]

The subject of invention is a ferroelectric ceramics based on (Ba, Sr) TiO3, whose sintering temperature is lowered to less than 920 degrees Celsius with addition of Li2O, which allows it to be sintered simultaneously with metallic silver. The low sinterable ferroelectric ceramics according to the invention is manufactured according to standard production procedures for ceramic elements, i.e. by casting or piling up thick layers or creation of thin layer films. The ceramics is characterised in that to a solid solution of (Ba1-xSrx)TiO3, where x is greater than 0 and less than

1, up to 20 w. % Li2O are added in the form of oxide or in any other form, which decomposes during thermal treatment, enabling the reaction of Li+ ions with BST.

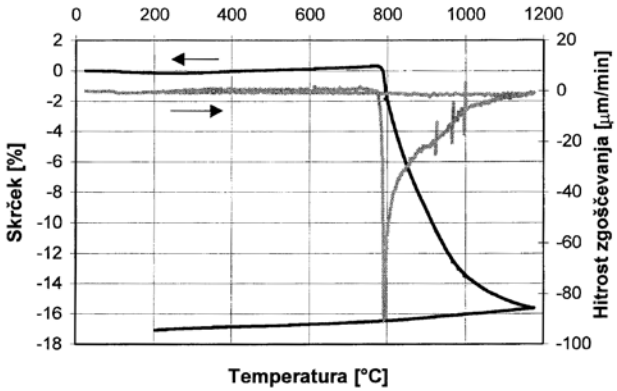

Nanotechnology and New Materials

Industrial manufacturing, material and transport

Industrial products, Other

https://worldwide.espacenet.com/patent/search/family/034511409/publication/SI21615A?q=si21615

UIL RS

Permeameter for Measuring Magnetic Properties at High Temperatures

EP1671146B1

7. 10. 2003

Jožef Stefan Institute [SI]

Gregor Geršak, Spomenka Kobe, Paul John McGuiness

Permeameter for Measuring Magnetic Properties at High Temperatures

The present invention relates to a measuring tool for measuring magnetic properties of a magnetic sample in a closed loop, comprising an electromagnet (1) in a closed loop arrangement with two pole pieces (3)

connected to a yoke (2), said pole pieces (3) forming a gap (4) for the placement of the sample (5), a search coil (6) for the measurement of a flux density B of the sample (5) and a magnetic field sensor (7) for the measurement of a magnetic field strength H in the gap (4) between said pole pieces (3). The pole pieces (3) comprise heater elements (8) for heating the pole pieces (3) to temperatures of at least 400° C and are thermally insulated against the yoke (2) of the electromagnet (1). The pole pieces (3), the search coil (6) and the magnetic field sensor (7) are made of materials which resist said high temperatures.

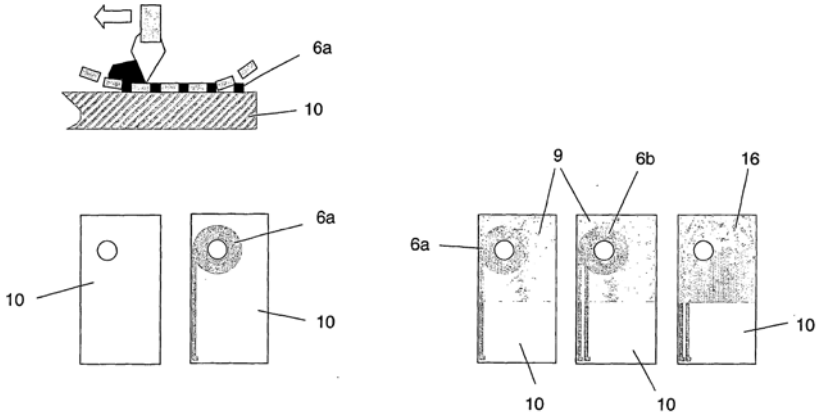

Nanotechnology and New Materials

Measurements and standards, Electronics, IT and telecoms

Other electronics related, Industrial products

https://worldwide.espacenet.com/patent/search/family/034486004/publication/EP1671146B1?q=EP1671146B1

EPO

Extended patent application

AT380350T

7. 10. 2003

Jožef Stefan Institute [SI]

Gregor Geršak, Spomenka Kobe, Paul John McGuiness

Permeameter Zur Messung Der Magnetischen Eigenschaften Bei Hohen Temperaturen

https://worldwide.espacenet.com/patent/search/family/034486004/publication/AT380350T?q=pn%3DAT380350T

Extended patent application

DE60317949T2

7. 10. 2003

Jožef Stefan Institute [SI]

Gregor Geršak, Spomenka Kobe, Paul John McGuiness

Permeameter Zur Messung Der Magnetischen Eigenschaften Bei Hohen Temperaturen

https://worldwide.espacenet.com/patent/search/family/034486004/publication/DE60317949T2?q=pn%3DDE60317949T2

Extended patent application

DK1671146T3

7. 10. 2003

Jožef Stefan Institute [SI]

Gregor Geršak, Spomenka Kobe, Paul John McGuiness

Permeameter til måling af magnetiske egenskaber ved höje temperaturer

https://worldwide.espacenet.com/patent/search/family/034486004/publication/DK1671146T3?q=pn%3DDK1671146T3

Extended patent application

WO2005040842A1

7. 10. 2003

Jožef Stefan Institute [SI], Geršak Gregor [SI], Spomenka Kobe [SI], Paul John McGuiness [SI]

Gregor Geršak, Spomenka Kobe, Paul John McGuiness

Permeameter for Measuring Magnetic Properties at High Temperatures

https://worldwide.espacenet.com/patent/search/family/034486004/publication/WO2005040842A1?q=pn%3DWO2005040842A1

Extended patent application

ES2298565T3

7. 10. 2003

Jožef Stefan Institute [SL]

Gregor Geršak, Spomenka Kobe, Paul John McGuiness

Permeametro para medir caracteristicas magneticas a elevadas temperaturas.

https://worldwide.espacenet.com/patent/search/family/034486004/publication/ES2298565T3?q=pn%3DES2298565T3

Extended patent application

PT1671146E

7. 10. 2003

Jožef Stefan Institute [SI]

Gregor Geršak, Spomenka Kobe, Paul John McGuiness

Permeameter for Measuring Magnetic Properties at High Temperatures

https://worldwide.espacenet.com/patent/search/family/034486004/publication/PT1671146E?q=pn%3DPT1671146E

Extended patent application

SI1671146T1

7. 10. 2003

Jožef Stefan Institute [SI]

Gregor Geršak, Spomenka Kobe, Paul John McGuiness

Permeameter za merjenje magnetnih lastnosti pri visokih temperaturah [SL], Permeameter for Measuring Magnetic Properties at High Temperatures [EN]

https://worldwide.espacenet.com/patent/search/family/034486004/publication/SI1671146T1?q=pn%3DSI1671146T1

Extended patent application

US7368906B2

7. 10. 2003

Jožef Stefan Institute [SI]

Gregor Geršak, Spomenka Kobe, Paul John McGuiness

Tool for Measuring Magnetic Properties at High Temperatures

https://worldwide.espacenet.com/patent/search/family/034486004/publication/US7368906B2?q=US7368906B2

Electrical Component Used as a Capacitor or Varistor Comprises a Base Body Made from a Ceramic Material, and an Electrically Conducting Contact Layer for Contacting the Component and Arranged on the Surface of the Base Body

DE10325008B4

3. 6. 2003

EPCOS AG [DE]

Florian Heinz, Klaus Reichmann, Danilo Suvorov, Matjaž Valant

Elektrisches Bauelement und dessen Herstellung Abstract [DE], Electrical Component Used as a Capacitor or Varistor Comprises a Base Body Made from a Ceramic Material, and an Electrically Conducting Contact Layer for Contacting the Component and Arranged on the Surface of the Base Body [EN]

The invention relates to an electrical component comprised of a base body (1) made from a ceramic material of the composition: (Bi 2O 3) 1 - x(Nb 2O 5) x (where x = 0.19-0.3), and an electrically conducting contact layer (2, 3) for contacting the component and arranged on the surface of the base body. An independent claim is also included for a process for the production of an electrical component.

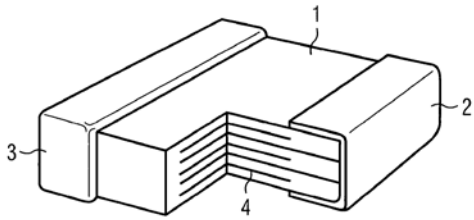

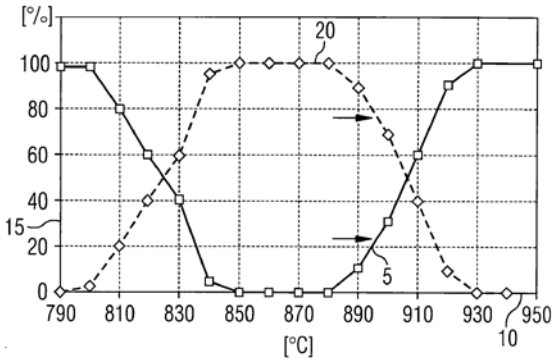

Nanotechnology and New Materials

Electronics, IT and telecoms, Energy

Other electronics related, Energy, Industrial products

https://worldwide.espacenet.com/patent/search/family/033482422/publication/DE10325008B4?q=DE10325008B4

DE

2002

Procedure and Device for Solidification Control of Ceramic Water Suspensions in Closed Moulds

SI21150A

6. 2. 2002

Jožef Stefan Institute [SI]

Goran Dražič, Srečko Maček, Saša Novak

Postopek in naprava za nadzor strjevanja keramičnih vodnih suspenzij v zaprtih kalupih [SL], Procedure and Device for Solidification Control of Ceramic Water Suspensions in Closed Moulds [EN]

The subject of the submitted invention are the procedure and device for solidification control of ceramic water suspensions in closed moulds by measuring the impedance in a wider frequency spectre or at a selected frequency. The solidification of the suspension due to a chemical reaction of the added reactant can be detected by a fast increase in resistivity - the suspension has solidified, when the electric resistivity has increased by at least 10 times. The process provides an exact control over solidification during the complete process in place, this means directly on the product, while measuring is non-destructive for the product and electrodes. There are two versions described. With the first one the frequency susceptibility of the impedance is measured, and based on Cole-Cole diagrams the high-frequency resistivity is calculated, which during solidification of the suspension increases by tenfold or much more. According to the other, simplified method the solidification level of the suspension is determined by measuring resistivity at a predefined frequency while with the help of a comparator circuit the increase of the resistivity of at least ten times is determined.

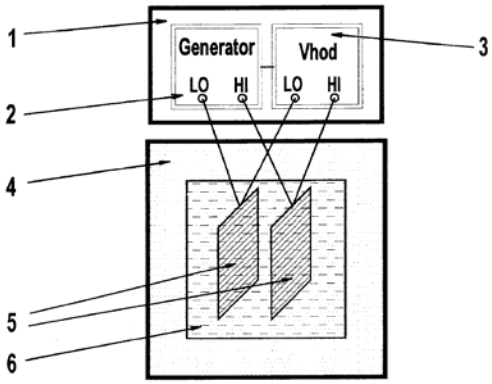

Nanotechnology and New Materials

Measurements and standards, Industrial manufacturing, material and transport

Industrial products, Other

https://worldwide.espacenet.com/patent/search/family/027800918/publication/SI21150A?q=si21150

UIL RS

Suspensions of Powders for Plastic Forming at Room Temperature and Processes of Forming This Suspension

SI21266A

24. 7. 2002

Jožef Stefan Institute [SI]

Aleš Dakskobler, Tomaž Kosmač

Suspenzije prahov za plastično oblikovanje pri sobni temperaturi in postopki oblikovanja te suspenzije [SL], Suspensions of Powders for Plastic Forming at Room Temperature and Processes of Forming This Suspension [EN]

The invention relates to suspensions of ceramic and/or metal powders which are characterized by their liquid phase based on paraffin oil, which is defined as a mixture of aliphatic non-branched hydrocarbons with 9-18 carbon atoms in the chain and dry substance content between 35 and 65 % by vol. The following advantages can be obtained with the solution proposed by the invention: the suspension prepared in accordance with the procedure described can be plastic-formed at a room temperature and the resulting shape of products retained by cooling down or immersion in water. Next, the suspension according to the invention can be used for shaping products with greater volume. Finally, suspensions according to the invention can be used for preparation of cellular composites by stacking layers of various composition one upon another and rolling them. The process of preparation of suspensions is not expensive or technically demanding and even does not require some special equipment.

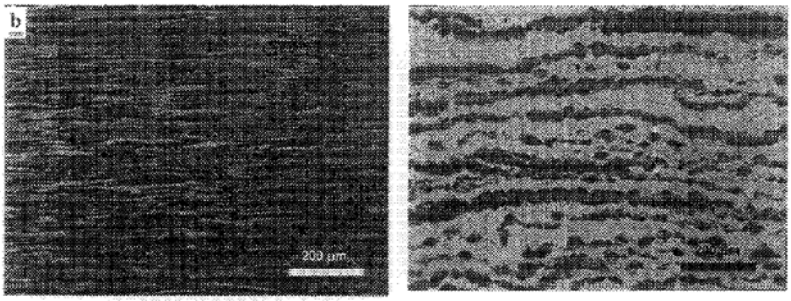

Nanotechnology and New Materials

Industrial manufacturing, material and transport

Industrial products

https://worldwide.espacenet.com/patent/search/family/031493132/publication/SI21266A?q=%20SI200200185A

UIL RS

Extended patent application

AU2003254988A8

16. 7. 2003

Jožef Stefan Institute [SI]

Aleš Dakskobler, Tomaž Kosmač

Powders Suspensions for Plastic Forming at Room Temperature and Processes of Forming This Suspension

https://worldwide.espacenet.com/patent/search/family/031493132/publication/AU2003254988A8?q=AU2003254988A8

Extended patent application

WO2004013067A3

16. 7. 2003

Jožef Stefan Institute [SI], Dakskobler Aleš [SI], Kosmač Tomaž [SI]

Aleš Dakskobler, Tomaž Kosmač

Powders Suspensions for Plastic Forming at Room Temperature and Processes of Forming This Suspension

https://worldwide.espacenet.com/patent/search/family/031493132/publication/WO2004013067A3?q=WO2004013067A3%20

Composition and Preparation of Water Suspensions for Producing of Multilayered Varistors

SI21367A

27. 12. 2002

Jožef Stefan Institute [SI]

Jena Cilenšek, Andrej Degen, Silvo Drnovšek, Marija Kosec, Srečko Maček, Urška Muhič

Sestava in priprava vodnih suspenzij za izdelavo večplastnih varistorjev [SL], Composition and Preparation of Water Suspensions for Producing of Multilayered Varistors [EN]

The subject of invention is the composition and procedure of preparation of a stable water suspension - mixture of metal oxides - for the manufacture of multilayer ZnO varistors according to the slip casting method. The procedure of preparation of a stable suspension - mixture of powdered oxides ZnO, Bi2O3, Mn3O4, Co3O4 and TiO2 - is indicated by dispersing 1 up to 80 weight % of solid substance with the average particle size of 1,0 to 5,0 micrometers in water containing 0,08 to 0,3 weight % of dispersant, by adding at the same time to the suspension after dispersing 5 to 15 weight % of binder and plasticizer in relative proportions of 100:0, 75:25, 50:50, 25:75 and 0:100, and by casting the suspension of oxide powders after dispersing and addition of binder and plasticizer on a movable

surface at the distance between the slip casting blade and the movable substrate of 100 up to 260 micrometers. The slip-cast and dried ceramic layer is then used for the manufacture of multilayer ZnO varistors.

/

Nanotechnology and New Materials

Electronics, IT and telecoms, Industrial manufacturing, material and transport

Other electronics related

https://worldwide.espacenet.com/patent/search/family/032653820/publication/SI21367A?q=si21367

UIL RS

Ferroelectric Thick-Layer Structures on Silicon

SI21386A

10. 12. 2002

Jožef Stefan Institute [SI]

Silvo Drnovšek, Janez Holc, Marija Kosec

Feroelektrične debeloplastne strukture na siliciju [SL], Ferroelectric Thick-Layer Structures on Silicon [EN]

The subject of the invention are thick-layer structures on a silicon base, which feature good ferroelectric properties and simple application. The invention profits from the excellent adhesion between aluminium oxide and the silicon base as well as aluminium oxide and precious metals. According to the invention the task is solved by applying an intermediate layer (2) of aluminium oxide between the silicon base (1) and the electrode (3) made of precious metals. The layer of aluminium oxide features a dopant, which allows heating up to 950 degrees Celsius.

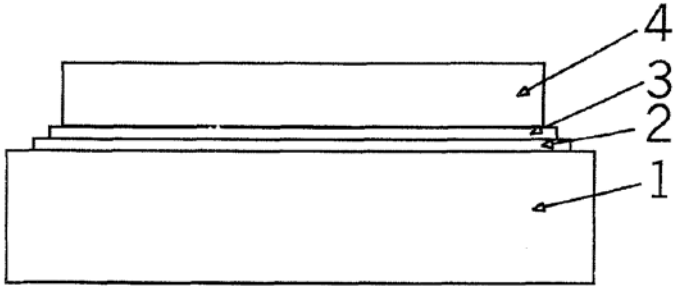

Nanotechnology and New Materials

Electronics, IT and telecoms, Energy

Other electronics related, Energy

https://worldwide.espacenet.com/patent/search/family/032653805/publication/SI21386A?q=si21386

UIL RS

Material Based On Single-Layer Nanotube Bundles of Transient Metals Dichalcogenides and Electronic Conductor for the Use in Lithium Batteries and Accumulators

SI21155A

27. 2. 2002

Jožef Stefan Institute [SI], The National Institute of Chemistry [SI]

Denis Arčon, Robert Dominko, Miran Gaberšček, Dragan D. Mihailović, Aleš Mrzel, Maja Remškar

Material na osnovi svežnjev enoplastnih nanocevk dihalkogenidov prehodnih kovin in elektronskega prevodnika za uporabo v litijevih baterijah in akumulatorjih [SL], Material Based On Single-Layer Nanotube Bundles of Transient Metals Dichalcogenides and Electronic Conductor for the Use in Lithium Batteries and Accumulators [EN]

The invention deals with the manufacture and application of electronic material based on single-layer nanotubes of dichalcogenides of transient metals and electronic conductor for lithium-ion batteries and accumulators.

The material based on single-layer nanotubes of dichalcogenide transient metals and electronic conductor provide the integration of lithium into lithium-diaphragm batteries and the integration of lithium to lithium-ion batteries. The quantity of the integrated lithium in the material based on single-layer nanotube bundles of transient metals dichalcogenides and electronic conductor depends on the share of the active material and on the preparation of these, amounting to 3.2 mol (average value 2.3 mol) lithium per mol of transient metal chalcogenides. The average voltage of making lithium from active material based on single-layer MoS2 nanotube bundles and electronic conductor, is 1.1 V measured against the semi-element Li/Li+.

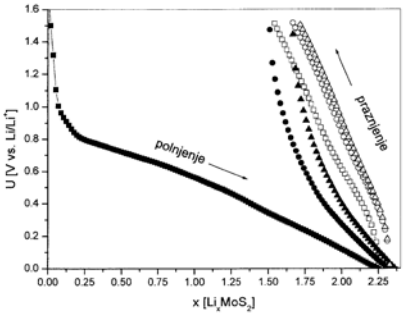

Nanotechnology and New Materials

Physical and exact sciences, Energy

Energy, Industrial products, Other

https://worldwide.espacenet.com/patent/search/family/027765021/publication/SI21155A?q=%20SI200200057A

UIL RS

Extended patent application

AU2003214788A1

20. 2. 2003

Jožef Stefan Institute [SI], The National Institute of Chemistry [SI]

Denis Arčon, Robert Dominko, Miran Gaberšček, Dragan D. Mihailović, Aleš Mrzel, Maja Remškar

Active Material Based on Bundles of One-Dimensional Transition Metal Dichalcogenide Nanotubes for Use in Lithium Batteries and Accumulators

https://worldwide.espacenet.com/patent/search/family/027765021/publication/AU2003214788A1?q=pn%3DAU2003214788A1

Extended patent application

WO03073538A1

20. 2. 2003

Jožef Stefan Institute [SI], The National Institute of Chemistry [SI], Denis Arčon [SI], Robert Dominko [SI], Miran Gaberšček [SI], Dragan D. Mihailović [SI], Aleš Mrzel [SI], Maja Remškar [SI]

Denis Arčon, Robert Dominko, Miran Gaberšček, Dragan D. Mihailović, Aleš Mrzel, Maja Remškar

Active Material Based on Bundles of One-Dimensional Transition Metal Dichalcogenide Nanotubes for Use in Lithium Batteries and Accumulators

https://worldwide.espacenet.com/patent/search/family/027765021/publication/WO03073538A1?q=pn%3DWO03073538A1

Use of Quasi-one-dimensional Ternary Compounds of Transition Metals and Quasionedimensional Compounds of Transition Metal Chalcogenides as Electron Emitters

SI21289A

2. 8. 2002

Jožef Stefan Institute [SI]

Dragan D. Mihailović, Aleš Mrzel, Vincenc Nemanič, Maja Remškar, Marko Žumer

Uporaba kvazienodimenzionalnih ternarnih spojin prehodnih kovin in kvazienodimenzionalnih spojin halkogenidov prehodnih kovin kot emiterjev

elektronov [SL], Use of Quasionedimensional Ternary Compounds of Transition Metals and Quasi-one-dimensional Compounds of Transition Metal Chalcogenides as Electron Emitters [EN]

The invention refers to the use of quasionedimensional ternary compounds of transition metals MxHyHaz (M is a transition metal Mo, W, Ta, Nb; H is sulfur (S), selenium (Se), tellurium (Te); Ha is iodine (J)) and doped quasionedimensional ternary compounds of transition metals MxHyHaz (M is Ta, Ti, Nb; H is sulfur (S), selenium (Se), tellurium (Te); Ha is iodine (J)) with elements of the group 1b (silver (Ag), gold (Au) or copper (Cu)) as electron emitters under the effect of electric field. The proportion of quasionedimensional ternary compounds of transition metals or/and doped quasionedimensional ternary compounds of transition metals doped with elements of the group 1b in active material is between 0.1-99.9 %, and the remaining proportion may be additives in the form of conductive, nonconductive or semiconductive compounds or composites. Electron emission is taking place at a pressure less than 1 mbar.

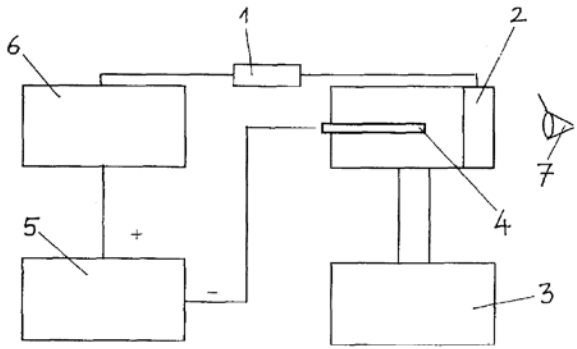

Nanotechnology and New Materials

Physical and exact sciences

Other electronics related, Other

https://worldwide.espacenet.com/patent/search/family/031493134/publication/SI21289A?q=si21289

UIL RS

Extended patent application

AU2003252637A1

23. 7. 2003

Jožef Stefan Institute [SI]

Dragan D. Mihailović, Aleš Mrzel, Vincenc Nemanič, Maja Remškar, Marko Žumer

Use of Quasi-one-dimensional Transition Metal Ternary Compunds and Quasi-one-dimensional Transition Metal Chalcogenides Compounds as Electron Emitters

https://worldwide.espacenet.com/patent/search/family/031493134/publication/AU2003252637A1?q=pn%3DAU2003252637A1

Extended patent application

EP1540687A1

23. 7. 2003

Jožef Stefan Institute [SI]

Dragan D. Mihailović, Aleš Mrzel, Vincenc Nemanič, Maja Remškar, Marko Žumer

Use of Quasi-one-dimensional Transition Metal Ternary Compunds and Quasi-one-dimensional Transition Metal Chalcogenides Compounds as Electron Emitters

https://worldwide.espacenet.com/patent/search/family/031493134/publication/EP1540687A1?q=pn%3DEP1540687A1

Extended patent application

WO2004013884A1

23. 7. 2003

Jožef Stefan Institute [SI], Dragan D.Mihailović [SI], Aleš Mrzel [SI], Vincenc Nemanič [SI], Maja Remškar [SI], Marko Žumer [SI]

Dragan D. Mihailović, Aleš Mrzel, Vincenc Nemanič, Maja Remškar, Marko Žumer

Use of Quasi-one-dimensional Transition Metal Ternary Compunds and Quasi-one-dimensional Transition Metal Chalcogenides Compounds as Electron Emitters

https://worldwide.espacenet.com/patent/search/family/031493134/publication/WO2004013884A1?q=pn%3DWO2004013884A1

Extended patent application

US2006231825A1

23. 7. 2003

Jožef Stefan Institute [SI]

Dragan D. Mihailović, Aleš Mrzel, Vincenc Nemanič, Maja Remškar, Marko Žumer

Use of Quasi-one-dimensional Transition Metal Ternary Compunds and Quasi-one-dimensional Transition Metal Chalcogenides Compounds as Electron Emitters

https://worldwide.espacenet.com/patent/search/family/031493134/publication/US2006231825A1?q=pn%3DUS2006231825A1

2001

Procedure of Preparation of Ferrite Ceramics by Hydrothermal Reaction Between Oxides and Carbonates

SI20940A

14. 6. 2001

Iskra Feriti d. o. o. [SI]

Mihael Drofenik, Darko Makovec, Andrej Žnidaršič

Postopek priprave feritne keramike s hidrotermalno reakcijo med oksidi in karbonati [SL], Procedure of Preparation of Ferrite Ceramics by Hydrothermal Reaction Between Oxides and Carbonates [EN]

The submitted invention refers to a technology of preparation of MnZn ferrite pellets by using a hydrothermal treatment of iron oxide (Fe2O3), manganese oxide (MnO) and zinc oxide (ZnO) at an elevated temperature and elevated pressure, where the procedure is characterized by the following mole % of the components: Fe2O3 = 49-55 mole %, MnO = 15-35 mole %, ZnO = 10-30 mole %, Dolapix = 0-20 mole %, 2-octanol = 0-20 mole %. The final electromagnetic properties of MnZn ferrite materials are determined by the ratio of the main oxide material components and organic dispersants as well as by respective temperature and atmospheric conditions of sintering. The high reactivity of the hydrothermally treated starting powder enables the manufacture of MnZn ferrite cores at a lower sintering temperature, with a uniform microstrucure and lower magnetic losses in comparison to the traditional technology, which all is the prerequisite for the miniaturization of electronic components on the field of professional electronics, technology of computers and satellite communications.

/

Nanotechnology and New Materials

Energy, Other industrial technologies

Other electronics related, Energy

https://worldwide.espacenet.com/patent/search/family/020432920/publication/SI20940A?q=si20940

UIL RS

Method for Protection of AlN Powder Against Decomposition in Humid Atmosphere or Water Medium

SI20813A

14. 2. 2001

Jožef Stefan Institute [SI]

Tomaž Kosmač, Kristoffer Krnel

Postopek zaščite prahu AlN pred razkrajanjem v vlažni atmosferi ali vodnem mediju [SL], Method for Protection of AlN Powder Against Decomposition in Humid Atmosphere or Water Medium [EN]

The invention relates to a method for protection of AlN powder carried out by adsorption of aluminium dihydrogen phosphate on the surface of AlN powder particles during mixing or grinding in water or a liquid containing water. The procedure for protection according to the invention is characterized by dispersion of 1 up to 80 weight % AlN powder with average particle size between 0,1 micrometres and 1 milimetre in water or a solution containing between 0,001 and 2,5 moles per litre of dissolved aluminium dihydrogen phosphate. During dispersion or later during drying, the AlN powder suspension is warmed up to a temperature above 60 degrees Celsius and after dispersion, the suspension of AlN powder is dried out or the AlN powder separated from the liquid by filtration, centrifugation or decantation and dried out, or washed and dried out. Alternatively, after dispersion and homogenization in the presence of organic or inorganic additives required for the preparation of ceramics, the AlN suspension may be used for the shaping of ceramic green bodies.

/

Nanotechnology and New Materials

Industrial manufacturing, material and transport

Industrial products, Other

https://worldwide.espacenet.com/patent/search/family/020432829/publication/SI20813A?q=si20813

UIL RS

2000

Process of Synthesis of Nanotubes of Transition Metals Dichalcogenides

SI20688A

10. 10. 2000

Jožef Stefan Institute [SI]

Dragan D. Mihailović, Aleš Mrzel, Igor Muševič, Maja Remškar, Zora Škraba

Postopek za sintezo nanocevčic dihalkogenidov prehodnih kovin [SL], Process of Synthesis of Nanotubes of Transition Metals Dichalcogenides [EN]

The invention refers to the process of synthesis of nanotubes of dichalkogenides of transition metals according to the method of chemical transport with addition of fullerenes. Nanotubes of dichalcogenides of transition metals are obtained by this process. The nanotubes are arranged hexagonally in the form of needle-like bundles. The process comprises the method of chemical transport where besides halogens (iodine and/or bromine) fullerenes are also applied under conditions where the latter are to be found in the vapour phase. The chemical transport reaction is taking place in a quartz ampule which is flame-sealed at the negative pressure greater than 5x10-3 torr. The temperature in the hot part of the ampule is higher than 830 degrees Celsius.

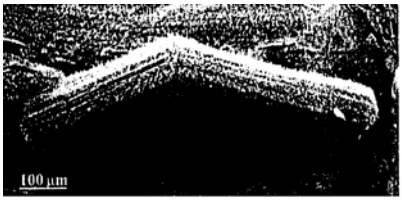

Nanotechnology and New Materials

Physical and exact sciences

Industrial products, Other

https://worldwide.espacenet.com/patent/search/family/020432737/publication/SI20688A?q=si20688

UIL RS

Extended patent application

AU9049901A

8. 10. 2001

Jožef Stefan Institute [SI]

Dragan D. Mihailović, Aleš Mrzel, Igor Muševič, Maja Remškar, Zora Škraba

Process of Synthesis of Nanotubes of Transition Metals Dichalcogenides

https://worldwide.espacenet.com/patent/search/family/020432737/publication/AU9049901A?q=pn%3DAU9049901A

Extended patent application

EP1339637A1

8. 10. 2001

Jožef Stefan Institute [SI]

Dragan D. Mihailović, Aleš Mrzel, Igor Muševič, Maja Remškar, Zora Škraba

Process of Synthesis of Nanotubes of Transition Metals Dichalcogenides

https://worldwide.espacenet.com/patent/search/family/020432737/publication/EP1339637A1?q=pn%3DEP1339637A1

Extended patent application

WO0230814A1

8. 10. 2001

Jožef Stefan Institute [SI], Dragan D. Mihailović [SI], Aleš Mrzel [SI], Igor Muševič [SI], Maja Remškar [SI], Zora Škraba [SI]

Dragan D. Mihailović, Aleš Mrzel, Igor Muševič, Maja Remškar, Zora Škraba

Process of Synthesis of Nanotubes of Transition Metals Dichalcogenides

https://worldwide.espacenet.com/patent/search/family/020432737/publication/WO0230814A1?q=pn%3DWO0230814A1

Extended patent application

US2004062708A1

15. 8. 2003

Dragan D. Mihailović [SI], Aleš Mrzel [SI], Igor Muševič [SI], Maja Remškar [SI], Zora Škraba [SI]

Dragan D. Mihailović, Aleš Mrzel, Igor Muševič, Maja Remškar, Zora Škraba

Process of Synthesis of Nanotubes of Transition Metals Dichalcogenides

https://worldwide.espacenet.com/patent/search/family/020432737/publication/US2004062708A1?q=pn%3DUS2004062708A1

Power Manganite Zinc Ferrites for Frequency Ranges Between 300 kHz and 1.5 MHz

SI20599A

5. 5. 2000

Iskra Feriti d. o. o. [SI]

Nevenka Rajnar, Andrej Žnidaršič

Močnostni mangan cink feriti za frekvenčno področje od 300 kHz do 1.5 MHz [SL], Power Manganite Zinc Ferrites for Frequency Ranges Between 300 kHz and 1.5 MHz [EN]

The suggested invention gives the basic chemical composition, technological and manufacturing process of preparing ferrite powder as well as its sintering process for producing soft-magnetic power Mn-Zn ferrites applicable for frequency ranges between 300 kHz and 1.5 MHz. The main features of the invention are its basic chemical compositions (Fe2O3 : MnO : ZnO), combination of small quantity supplementary components (CaO : TiO2 : SnO2), mixing, pelletization, calcination, two-stage mixing in an atrittoric mill, drying in a spray-dryer and corresponding adjusted atmospheric and temperature sintering conditions. The described process ensures lower magnetic losses and higher saturation densities compared to currently known soft-magentic power Mn - Zn ferrite materials. The final electromagnetic features of toroid cores are defined by the ratio between basic components of oxidising materials and corresponding temperature and atmospheric sintering conditions.

/

Nanotechnology and New Materials

Industrial manufacturing, material and transport,

Industrial products

https://worldwide.espacenet.com/patent/search/family/020432651/publication/SI20599A?q=si20599

UIL RS

Capacitor Comprises Two Or More Electrode Layers Lying Opposite Each Other with Dielectric Layers Made of a Ceramic Material Containing Different Components Between Them

DE10042359A1

29. 8. 2000

EPCOS AG [DE]

Christian Hoffmann, Helmut Sommariva, Danilo Suvorov, Matjaž Valant

Capacitor Comprises Two Or More Electrode Layers Lying Opposite Each Other with Dielectric Layers Made of a Ceramic Material Containing Different Components Between Them [EN] / Kondensator [DE]

The invention relates to a capacitor comprised by two or more electrode layers (1) lying opposite each other with dielectric layers (2) between them. The dielectric layers are made of a ceramic material containing two different components in a phase different from the other. The components have a perovskite structure with silver on the A positions and niobium and tantalum on the B positions. Components A and B are selected so that the temperature coefficients of their dielectric constants have different polarities in a temperature range. Preferred Features: The dielectric layers have a thickness of 1-50 Micro. The ceramic material contains boric acid as sintering aid.

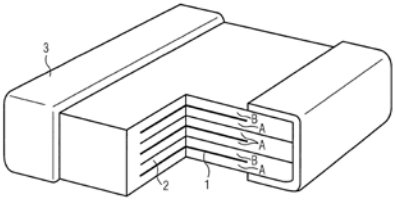

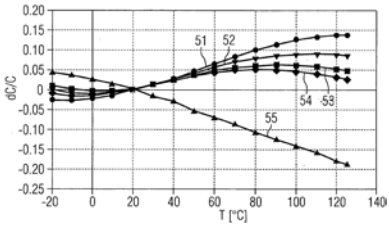

Nanotechnology and New Materials

Electronics, IT and telecoms

Industrial products

https://worldwide.espacenet.com/patent/search/family/034679836/publication/DE10042359B4?q=%20DE10042359B4

DE

Ceramic Material Used in the Electrical Industry e.g. For Producing Dielectric Resonators Contains Two Different Components Having a Perovskite Structure Containing Silver on the A Sites and Niobium and Tantalum on the B Sites

DE10042350C1

29. 8. 2000

Epcos AG [DE]

Christian Hoffmann, Helmut Sommariva, Danilo Suvorov, Matjaž Valant

Ceramic Material Used in the Electrical Industry E.G. For Producing Dielectric Resonators Contains Two Different Components Having a Perovskite Structure Containing Silver on the A Sites and Niobium and Tantalum on the B Sites [EN], Keramikmaterial [DE]

The invention relates to a ceramic material containing two different components in phases different from each other. The components have a perovskite structure containing silver on the A sites and niobium and tantalum on the B sites. The composition of the components is selected so that the temperature coefficients of their dielectric constants are different in a temperature interval. Preferred Features: The material is produced by sintering a mixture of particles of component A with particles of component B using H3BO3 or V2O5 as sintering aid.

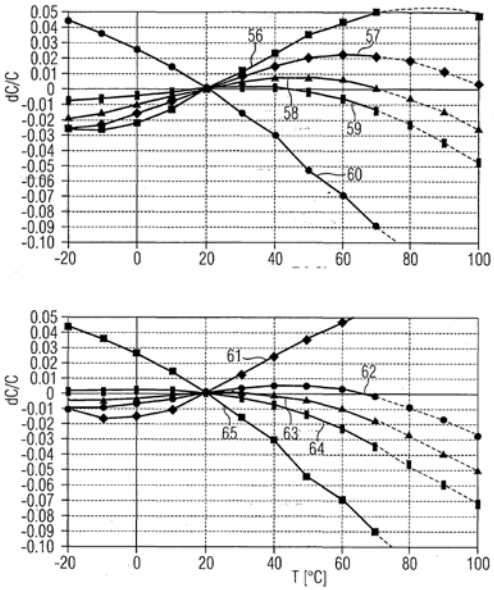

Nanotechnology and New Materials

Industrial manufacturing, material and transport, Energy

Other electronics related, Energy

https://worldwide.espacenet.com/patent/search/family/007654139/publication/DE10042350C1?q=%20DE10042350C1

DPMA

Extended patent application

AU8956001A

13. 8. 2001

EPCOS AG [DE]

Christian Hoffmann, Helmut Sommariva, Danilo Suvorov, Matjaž Valant

Dielectric Ceramic Material That Contains Silver, Niobium And Tantalate

https://worldwide.espacenet.com/patent/search/family/007654139/publication/AU8956001A?q=%20DE10042350C1

Extended patent application

WO0218294A1

13. 8. 2001

EPCOS AG [DE], Hoffmann Christian [AT], Sommariva Helmut [AT], Suvorov Danilo [SI], Valant Matjaž [SI]

Christian Hoffmann, Helmut Sommariva, Danilo Suvorov, Matjaž Valant

Dielectric Ceramic Material That Contains Silver Niobium and Tantalate

https://worldwide.espacenet.com/patent/search/family/007654139/publication/WO0218294A1?q=%20DE10042350C1

Extended patent application

EP1313679A1

13. 8. 2001

EPCOS AG [DE]

Christian Hoffmann, Helmut Sommariva, Danilo Suvorov, Matjaž Valant

Dielectric ceramic material that contains silver, niobium and tantalate

https://worldwide.espacenet.com/patent/search/family/007654139/publication/EP1313679A1?q=%20EP1313679A1

Extended patent application

JP5283813B2

13. 8. 2001

/

/

/

https://worldwide.espacenet.com/patent/search/family/007654139/publication/JP5283813B2?q=JP5283813B2%20

Extended patent application

TWI243157B

24. 8. 2001

EPCOS AG [DE]

Christian Hoffmann, Helmut Sommariva, Danilo Suvorov, Matjaž Valant

Ceramic material

https://worldwide.espacenet.com/patent/search/family/007654139/publication/TWI243157B?q=%20DE10042350C1

Extended patent application

US6956001B2

4. 8. 2003

EPCOS AG [DE]

Christian Hoffmann, Helmut Sommariva, Danilo Suvorov, Matjaž Valant

Dielectric Ceramic Material That Contains Silver Niobium and Tantalate

https://worldwide.espacenet.com/patent/search/family/007654139/publication/US6956001B2?q=%20US6956001B2

Microwave Component Comprising a Silver Niobium Tantalate Containing Dielectric Ceramic Base

DE10042360C1

29. 8. 2000

Epcos AG [DE]

Christian Hoffmann, Helmut Sommariva, Danilo Suvorov, Matjaž Valant

Microwave Component Comprising a Silver Niobium Tantalate Containing Dielectric Ceramic Base [EN] / Mikrowellen-Bauelement [DE]

The present invention relates to a microwave component comprising a base (1), in entrance surface (6) and an exit surface (7), said base (1) comprising a ceramic material. Said ceramic material contains at least two different components, available as separate phases, which each have a perowskite structure that has silver in the A positions and niobium or tantalum in the B positions. The composition of component A and the composition of component B is selected in such a manner that the temperature coefficients of their dielectric constants TK epsilon A and TK epsilon B have different signs in a given temperature interval. Advantageously, the proportions of the mixture of component A/component B are selected to result in an as complete a compensation of TK epsilon A and TK epsilon B as possible according to Lichtenecker's law. The temperature gradient of TK epsilon A and TK epsilon B can be adjusted by the quantitative proportion of niobium to tantalum and by adding dopants.

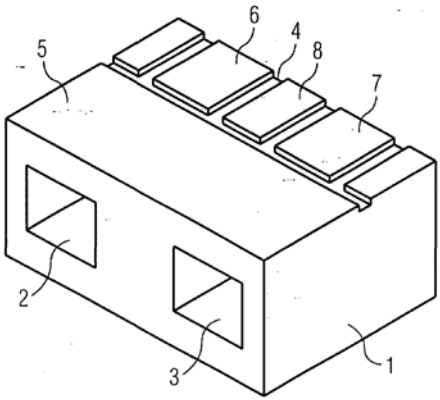

Nanotechnology and New Materials

Electronics, IT and telecoms, Industrial manufacturing, material and transport

Other electronics related, Industrial products, Energy

https://worldwide.espacenet.com/patent/search/family/007654145/publication/DE10042360C1?q=%20DE10042360A

DPMA

Extended patent application

AU8753101A

10. 8. 2001

EPCOS AG [DE]

Christian Hoffmann, Helmut Sommariva, Danilo Suvorov, Matjaž Valant

Microwave Component Comprising a Silver Niobium Tantalate Containing Dielectric Ceramic Base

https://worldwide.espacenet.com/patent/search/family/007654145/publication/AU8753101A?q=%20DE10042360A

Extended patent application

WO0219462A1

10. 8. 2001

EPCOS AG [DE], Christian Hoffmann [AT], Helmut Sommariva [AT], Danilo Suvorov [SI], Matjaž Valant [SI]

Christian Hoffmann, Helmut Sommariva, Danilo Suvorov, Matjaž Valant

Microwave Component Comprising a Silver Niobium Tantalate Containing Dielectric Ceramic Base

https://worldwide.espacenet.com/patent/search/family/007654145/publication/WO0219462A1?q=%20DE10042360A

Extended patent application

JP2004508672A

10. 8. 2001

/

/

/

https://worldwide.espacenet.com/patent/search/family/007654145/publication/JP2004508672A?q=%20DE10042360A

Extended patent application

US2004029711A1

9. 8. 2003

EPCOS AG [DE], Hoffmann Christian [DE], Sommariva Helmut [AT], Suvorov Danilo [SI], Valant Matjaž [SI]

Christian Hoffmann, Helmut Sommariva, Danilo Suvorov, Matjaž Valant

Microwave Component Comprising a Silver Niobium Tantalate Containing Dielectric Ceramic Base

https://worldwide.espacenet.com/patent/search/family/007654145/publication/US2004029711A1?q=%20DE10042360A

Production of a Ceramic Body Comprises Forming Particles of a Sort A and a Sort B, forming a Particle Mixture by Mixing the Different Sorts of Particles, producing a Blank by Pressing the Particle Mixture, and Sintering

DE10042349C1

29. 8. 2000

Epcos AG [DE]

Christian Hoffmann, Helmut Sommariva, Danilo Suvorov, Matjaž Valant

Production of a Ceramic Body Comprises Forming Particles of a Sort A and a Sort B, forming a Particle Mixture by Mixing the Different Sorts of Particles, producing a Blank by Pressing the Particle Mixture, And Sintering [EN], Verfahren zur Herstellung eines keramischen Körpers [DE]

The invention relates to the production of a ceramic body comprising forming particles of a sort A and a sort B each having an expansion of at least 5 microns m and each comprising a ceramic material based on a mixture of silver oxide, niobium oxide and tantalum oxide; forming a particle mixture by mixing the different sorts of particles; producing a blank by pressing the particle mixture; and sintering. Preferred Features: The particles contain the ceramic materials in granular form held by a binder. The particles are produced from a suspension made from a calcinate of the composition A and B.

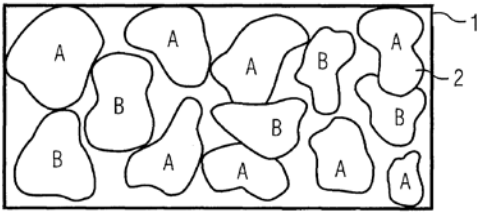

Nanotechnology and New Materials

Industrial manufacturing, material and transport, Physical and exact sciences

Industrial products

https://worldwide.espacenet.com/patent/search/family/007654138/publication/DE10042349C1?q=%20DE10042349A

DPMA

Extended patent application

AU8956201A

14. 8. 2001

EPCOS AG [DE]

Christian Hoffmann, Helmut Sommariva, Danilo Suvorov, Matjaž Valant

Method for Producing a Ceramic Silver Niobium Tantalate Body

https://worldwide.espacenet.com/patent/search/family/007654138/publication/AU8956201A?q=AU8956201A

Extended patent application

WO0218295A1

14. 8. 2001

EPCOS AG [DE], Christian Hoffmann [AT], Helmut Sommariva [AT], Danilo Suvorov [SI], Matjaž Valant [SI]

Christian Hoffmann, Helmut Sommariva, Danilo Suvorov, Matjaž Valant

Method for Producing a Ceramic Silver Niobium Tantalate Body

https://worldwide.espacenet.com/patent/search/family/007654138/publication/WO0218295A1?q=WO0218295A1

Extended patent application

EP1313680A1

14. 8. 2001

EPCOS AG [DE]

Christian Hoffmann, Helmut Sommariva, Danilo Suvorov, Matjaž Valant

Method for Producing a Ceramic Silver Niobium Tantalate Body

https://worldwide.espacenet.com/patent/search/family/007654138/publication/EP1313680A1?q=EP1313680A1

Extended patent application

JP2004507433A

14. 8. 2001

/

/

/

https://worldwide.espacenet.com/patent/search?q=pn%3DJP2004507433A

Extended patent application

TW572865B

10. 8. 2001

EPCOS AG [DE]

Christian Hoffmann, Helmut Sommariva, Danilo Suvorov, Matjaž Valant

Method for Producing a Ceramic Body

https://worldwide.espacenet.com/patent/search?q=pn%3DTW572865B

Extended patent application

US6843956B2

4. 8. 2003

EPCOS AG [US]

Hoffmann Christian, Sommariva Helmut, Suvorov Danilo, Valant Matjaž

Method for Producing a Ceramic Silver Niobium Tantalate Body

https://worldwide.espacenet.com/patent/search/family/007654138/publication/US6843956B2?q=US6843956B2

Biological Sciences

2017

Method of Treating Garlic Cloves

SI25440A

12. 6. 2017

Jožef Stefan Institute [SI]

Jernej Iskra, Ita Junkar, Miran Mozetič, Gregor Primc, Primož Titan

Metoda za obdelavo strokov česna [SL], Method of Treating Garlic Cloves [EN]

The subject of the patent application is a method for treating garlic pods with highly reactive gaseous species, such as those formed in gas plasma. The subject of the patent application is also a device that can be used for this type of processing. The described treatment serves as a method of improving the properties of plants grown from such treated pods for use in agriculture. Examples include improved germination, accelerated growth, increased yield or enhanced plant vitality.

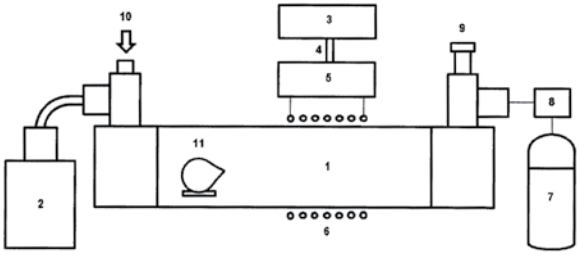

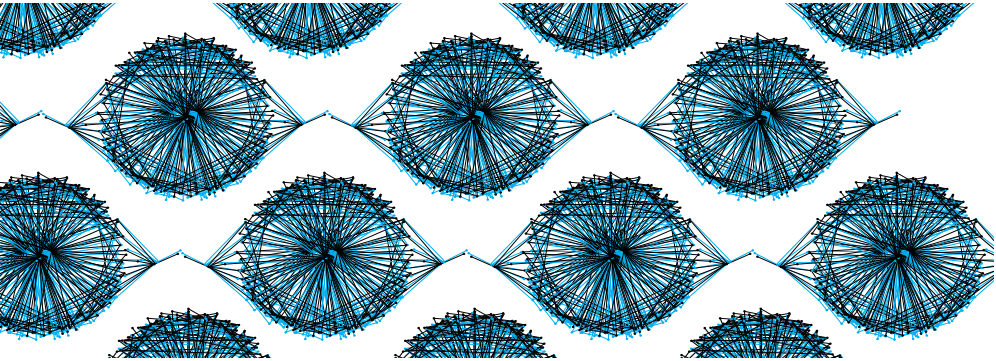

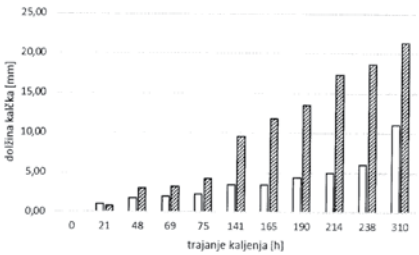

Biological Sciences

Biological sciences, Physical and exact sciences, Agrofood industry

Genetic engineering / molecular biology, Other

https://worldwide.espacenet.com/patent/search/family/064746671/publication/SI25440A?q=si25440

UIL RS

2016

Flow Device

GB2548889A

31. 3. 2016

Jožef Stefan Institute [SI]

Milena Horvat, Ermira Begu, Yaroslav Shlyapnikov, Andrej Stergaršek, Peter Frkal, Jože Kotnik

Flow Device

This invention relates to a flow device for extracting a dissolved analyte from a liquid sample, comprising (i) a liquid sample inlet 1, (ii) a carrier gas inlet 2, (iii) an equilibration section 5, where flows of liquid sample and carrier gas coming from the inlets are mixed and equilibration of the content of analyte in the two phases takes place, and (iv) a gas-liquid phase separator 6 downstream of the equilibration section, for separating the gaseous phase with the extracted analyte from the liquid phase of the mixture. Mixing of the two phases may take place in a mixing chamber prior to entry into the equilibration section, which may comprise a helical tube. The lower part of the gas-liquid separator may comprise a U-shaped tube 7 branching off to two outlets, one for the treated liquid sample and another for residual carrier gas. The upper part thereof may be connected to a device 9 for measuring the analyte concentration in the carrier gas, whereby its concentration in the liquid sample may be determined via the value of partition coefficient. Preferably the analyte is elemental mercury, the liquid sample is wet flue gas desulfurisation scrubber solution and the carrier gas is nitrogen.

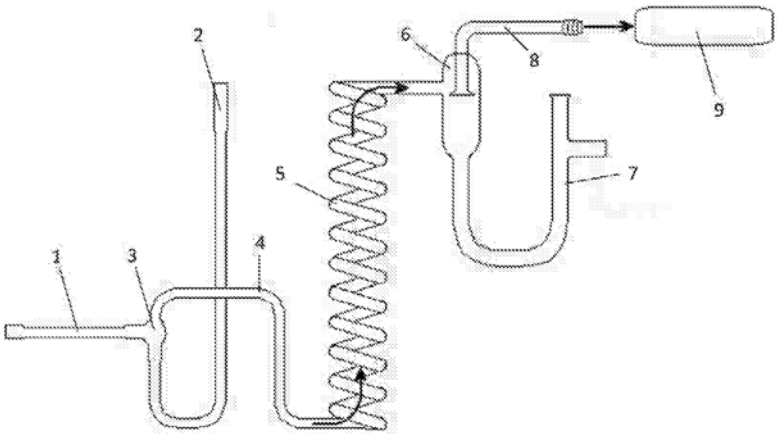

Biological Sciences

Measurements and standards, Protecting man and environment

Industrial products, Medical / health related

https://worldwide.espacenet.com/patent/search/family/059773330/publication/GB2548889A?q=GB2548889

GB

Extended patent application

SI25182A

21. 3. 2017

Jožef Stefan Institute [SI]

Milena Horvat, Ermira Begu, Yaroslav Shlyapnikov, Andrej Stergaršek, Peter Frkal, Jože Kotnik

Pretočna naprava [SL], Flow device [EN]

https://worldwide.espacenet.com/publicationDetails/originalDocument?FT=D&date=20171030&DB=EPODOC&locale=en_ES&CC=SI&NR=25182A&KC=A&ND=5

Remediation Apparatus and Procedure for Remediation of Water from Small Biological Wastewater Treatment Plants

SI25327A

27. 12. 2016

Jožef Stefan Institute [SI], Zavod za gradbeništvo Slovenije [SI]

Alenka Mauko Pranjič, Ana Mladenovič, Andrijana Sever Škapin, Janez Ščančar, Janja Vidmar, Mirko Šprinzer, Peter Nadrah, Primož Oprčkal, Radmila Milačič

Remediacijska naprava in postopek za remediacijo vod iz malih bioloških čistilnih naprav [SL], Remediation Apparatus and Procedure for Remediation of Water from Small Biological Wastewater Treatment Plants [EN]

This invention relates to a device and process for the remediation of water from small biological treatment plants. The invention envisages a remediation device for water remediation, which is connected to the outflow pipe of a small biological treatment plant (SBWTP), and connected to a water supply system for the consumers, consisting of a nano-remediation unit, oxidation units, and ion-exchange and filtration units. The process of water remediation is also envisaged, which leads to the purification of water to the quality of drinking water, the process comprising the steps of nano-remediation with zero-valent iron nanoparticles (nZVI), purification with oxidizing agents, ion-exchange purification and filtration on granular activated carbon. Finally, remediated water is suitable for all secondary human needs and for use in industry, for example concrete making.

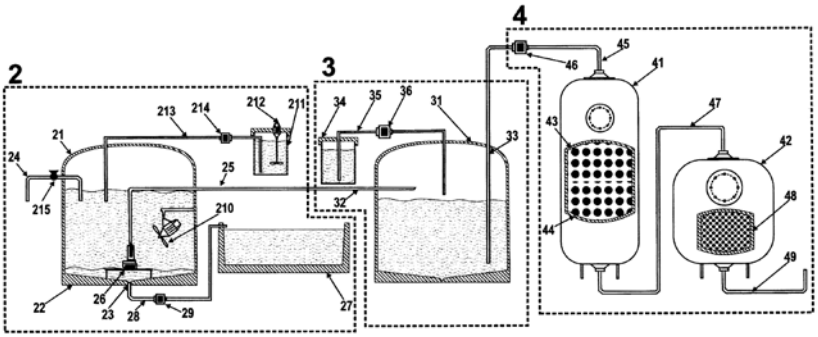

Biological Sciences

Protecting man and environment

Medical / health related, Consumer related, Industrial products

https://worldwide.espacenet.com/patent/search/family/061132882/publication/WO2018124972A1?q=si25327

UIL RS

Extended patent application

EP3562788A1

14. 11. 2017

Jožef Stefan Institute [SI], Zavod za gradbeništvo Slovenije [SI]

Alenka Mauko Pranjič, Ana Mladenovič, Andrijana Sever Škapin, Janez Ščančar, Janja Vidmar, Mirko Šprinzer, Peter Nadrah, Primož Oprčkal, Radmila Milačič

Method and System for the Potabilization of Effluents from Biological WWTPs

https://worldwide.espacenet.com/patent/search/family/061132882/publication/EP3562788A1?q=pn%3DEP3562788A1

Extended patent application

WO2018124972A1

14. 11. 2016

Jožef Stefan Institute [SI], Zavod za gradbeništvo Slovenije [SI]

Alenka Mauko Pranjič, Ana Mladenovič, Andrijana Sever Škapin, Janez Ščančar, Janja Vidmar, Mirko Šprinzer, Peter Nadrah, Primož Oprčkal, Radmila Milačič

Method and System for the Potabilization of Effluents from Biological WWTPs

https://worldwide.espacenet.com/patent/search/family/061132882/publication/WO2018124972A1?q=si25327

2015

The Impregnation Process and Attachment of Microorganisms in Porous Materials

SI24910A

27. 1. 2015

Inštitut za metagenomiko in mikrobne tehnologije d. o. o. [SI]

Aleš Lapanje

Postopek impregnacije in pritrditve mikroorganizmov v porozne materiale [SL], The Impregnation Process and Attachment of Microorganisms in Porous Materials [EN]

This invention relates to the process of impregnation of porous carriers with cells and the process of retaining cells in the pores of these impregnated carriers. The method is particularly suitable on porous carriers having a very low Young's modulus where it is not possible to exploit the elasticity of the carrier for cell entry as provided in the method described in U.S. Pat. No. 4,496,600. Thus prepared porous carriers are useful in biotechnological processes for biotechnological extraction of active substances from attached cellular biomass and decomposition of unwanted substances, as in the case of wastewater and drinking water treatment with microorganisms in biological treatment plants or in waterworks using sand filters. An essential advantage of the invention is that the cells are artificially attached to the pores of the impregnated carriers, where they are protected from external factors, as well as that the cells escape from the pores to a limited extent, thus reducing contamination of the end product of the biotechnological process. According to the present invention, impregnation of a porous support with a solution of linear polymers is used, which allows the process of crosslinking cells in the pore lumen of the porous support or bonding to pore surfaces by electrostatic bonding of cells to a prefabricated pore wall surface of a porous carrier. The intake of solutions is based on the exchange of eye changing pressure and the addition of solutions in the individual steps of the process. The porous supports thus prepared can then be used in continuous as well as batch processes.

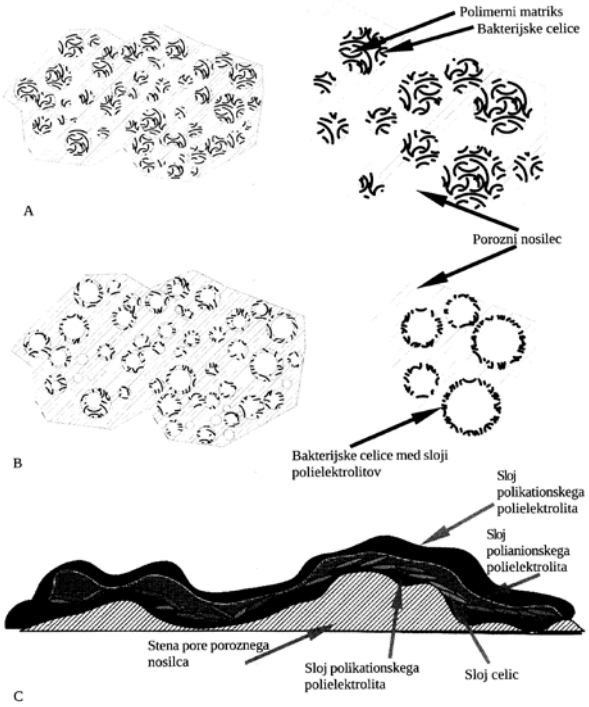

Biological Sciences

Biological sciences

Genetic engineering / molecular biology, Medical / health related

https://worldwide.espacenet.com/patent/search/family/056464752/publication/SI24910A?q=si24910

UIL RS

Extract from the Wood of Trees of the Genus Fir to Prevent, Alleviate or Treat Unwanted Skin Changes and Preparations

SI25053A

10. 9. 2015

Abies labs d. o. o. [SI]

Petra Keršmanc, Samo Kreft, Uroš Petrič, Tina Pogačnik, Tadej Rejc, Nataša Tavčar, Borut Štrukelj, Janko Žmitek, Katja Žmitek

Izvleček iz lesa dreves iz rodu jelka za preprečevanje, lajšanje in zdravljenje neželenih sprememb kože ter pripravki [SL], Extract from the Wood of Trees of the Genus Fir to Prevent, Alleviate or Treat Unwanted Skin Changes and Preparations [EN]

The invention refers to the extract from the wood of the fir tree (Abies) genus, preferentially silver fir (Abies alba) wood, in particular from knots, which contain a compound of natural polyphenols with a reduced share of high molecular polyphenols, namely by 15-100% considering the total content of natural polyphenols, and with an analogously increased share of low molecular polyphenols with a molar mass below 1,000 Da, used to prevent, reduce and treat unwanted skin changes in cosmetic and dermatological use, namely the extract alone or in the form of formulated cosmetic and pharmaceutical preparations for cosmetic and dermatological use. Since the share of high molecular polyphenols in the extract is significantly lower and the share of low molecular polyphenols significantly higher than in the compounds or extracts of fir trees known until now, skin penetration is substantially improved. The extract is used either in the form of a concentrate or a solid, a dry compound for dermal use directly or in the form of liquid, semi-solid and solid preparations, such as dermal liquids, including sprays, drops, shampoos and compresses, dermal powders (dusting powders), hydrophilic gels, hydrophilic creams, hydrophobic creams, ointments, pastes, plasters and others.

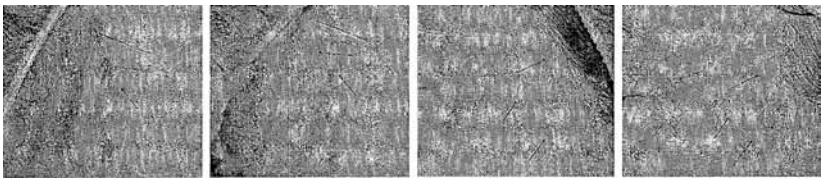

Biological Sciences

Biological sciences

Medical / health related, Consumer related

https://worldwide.espacenet.com/patent/search/family/057286781/publication/SI25053A?q=si25053

UIL RS

Extended patent application

WO2017044050A1

5. 9. 2016

Abies labs d. o. o. [SI]

Petra Keršmanc, Samo Kreft, Uroš Petrič, Tina Pogačnik, Tadej Rejc, Nataša Tavčar, Borut Štrukelj, Janko Žmitek, Katja Žmitek

Extract from Wood Trees of Genus Abies

https://worldwide.espacenet.com/patent/search/family/057286781/publication/WO2017044050A1?q=%20WO2017044050A1

Peptides for Pharmacological Intervention in Ghrelin System

SI25015A

8. 6. 2015

University of Ljubljana [SI]

Miha Vodnik, Borut Štrukelj, Eva Knuplež, Mojca Lunder, Valentina Kubale Dvojmoč

Peptidi za farmakološko poseganje v grelinski system [SL], Peptides for Pharmacological Intervention in Ghrelin System [EN]

The present invention relates to peptide inhibitors of the ghrelin receptor. The invention is provided by peptides and their use in the treatment of disease states associated with ghrelin receptor overactivation. The invention relates in particular to the use of peptide inhibitors and their derived peptides and peptidomimetics for the treatment or prevention of overweight, obesity and related diseases (such as metabolic syndrome, diabetes, car-

diovascular disease) and other diseases associated with overactivation ghrelin receptor such as endocrine disorders, eating disorders, addiction, gastrointestinal diseases, liver disease (cirrhosis), osteoporosis.

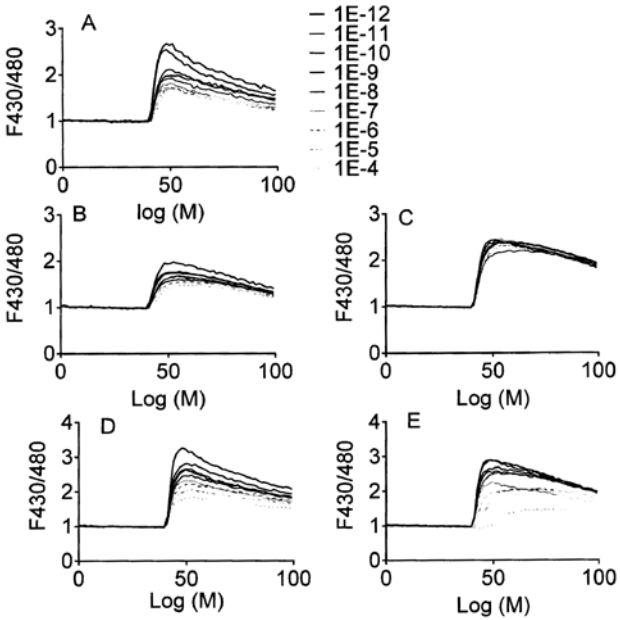

Biological Sciences

Biological sciences

Medical / health related

https://worldwide.espacenet.com/patent/search/family/057583440/publication/SI25015A?q=si25015

UIL RS

Mixture of Natural Polyphenols from White Fir Wood for Reducing Postprandial Glucose Concentration

SI24984A

6. 5. 2015

Abies labs, d. o. o.

Tomi Bremec, Jana Debeljak, Polonca Ferk, Samo Kreft, Mojca Lunder, Uroš Petrič, Tadej Rejc, Irena Roškar, Borut Štrukelj

Zmes naravnih polifenolov iz lesa bele jelke za zmanjševanje koncentracije postprandialne glukoze [SL], Mixture of Natural Polyphenols from White Fir Wood for Reducing Postprandial Glucose Concentration [EN]

In the present invention „A mixture of natural polyphenols from white fir wood to reduce postprandial glucose concentration“, a significant in vitro study showed a significant inhibitory effect of polyphenols on the enzyme alpha glucosidase and alpha amylase in a randomized, double-blind, placebo-controlled study that white fir wood extract (180 mg in a single dose) reduces the concentration of postprandial glucose in the blood by 35% after a meal containing 100 g of white bread, corresponding to 50 g of starch (acarbose; 50 mg in a single dose as standard) by 43%), which was the first to show the effectiveness of polyphenols from white fir wood.

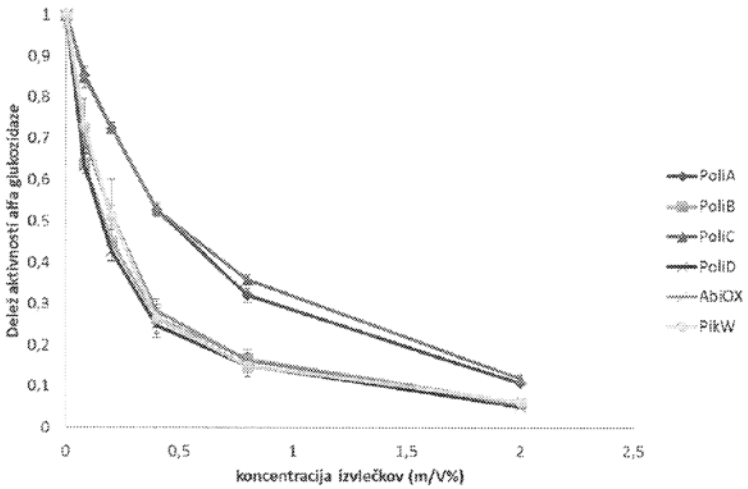

Biological Sciences

Biological sciences

Medical / health related

https://worldwide.espacenet.com/patent/search/family/057359461/publication/SI24984A?q=si24984

UIL RS

Process for Regulation of Lactic Acid Fermentation in Wine Production by Magnetic Elimination of Bacteria

SI24998A

6. 5. 2015

Jožef Stefan Institute [SI], University of Ljubljani [SI]

Peter Dušak, Marin Berovič, Darko Makovec

Postopek za uravnavanje mlečnokislinske fermentacije pri proizvodnji vina z magnetnim izločanjem bakterij [SL], Process for Regulation of Lactic Acid Fermentation in Wine Production by Magnetic Elimination of Bacteria [EN]

The subject of the invention is a process that allows the control of lactic acid fermentation of wine and is based on the use of magnetic particles. The production of wine is based on fermentation of must, which covers two fermentation processes; alcohol fermentation and lactic acid fermentation. Lactic acid or secondary fermentation, which usually begins after alcoholic fermentation, is a desirable process, as it reduces the acidity of the wine, strengthens the organoleptic characteristics of the wine and improves the microbiological stability of the wine. For known processes, acid-acid fermentations with addition of lactic acid bacteria, such as Oenococcus oeni, to must. Lactic bacteria convert malic acid into lactic acid and carbon dioxide. A technical problem that is not satisfactorily solved is the control of the process of lactic acid fermentation and the removal of lactic acid bacteria from the wine after lactic acid fermentation. Lactic acid bacteria multiply in the process of lactic acid fermentation and usually completely alter the substrate of malic acid into a product of lactic acid. When they run out of the primary substrate, malic acid, they begin to metabolize other substances into the wine, which can have a significant negative effect on the taste of the wine. It is an object and object of the present invention to enable the control of lactic acid fermen-

tation by isolating lactic acid bacteria from the wine at the appropriate stage of the lactic fermentation process or after completion of lactic acid fermentation. By eliminating bacteria, fermentation processes stop. The elimination of lactic acid bacteria is achieved by irreversible adsorption of magnetic particles onto their surfaces, which enables their removal from the must by using an external magnetic field.

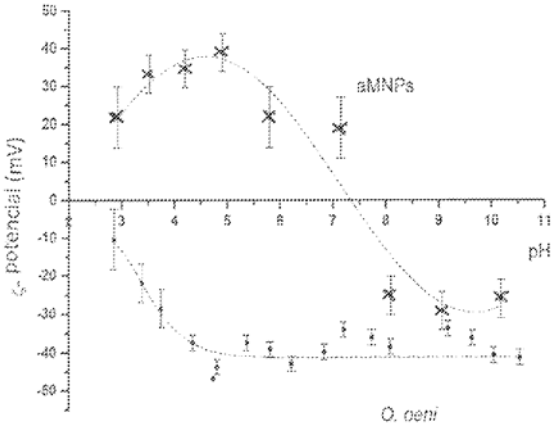

Biological sciences

Biological sciences, Measurements and standards, Agrofood industry

Genetic engineering / molecular biology, Consumer related

https://worldwide.espacenet.com/patent/search/family/057359463/publication/SI24998A?q=SI24998

UIL RS

Crystal Structure of Staphylococcus Aureus Autolysin E, Method of Producing the Crystal and Its Use in Screening Methods

WO2016173603A1

27. 4. 2015

Jožef Stefan Institute [SI]

Marko Mihelič, Miha Renko, Dušan Turk

Crystal Structure of Staphylococcus Aureus Autolysin E, Method of Producing the Crystal and Its Use in Screening Methods

The invention concerns the determination and evaluation of the crystal structure of autolysin E (AtlE) of Staphylococcus aureus (S. aureus), or a crystallizable fragment of AtlE, a method for producing a crystal of AtlE and the respective crystallization kit, and its use in a method for screening an inhibitor of the N-acetylglucosaminidase activity of AtlE, for obtaining atomic spatial relationship data, and for identifying a binding compound of AtlE, e.g. by in silico screening.

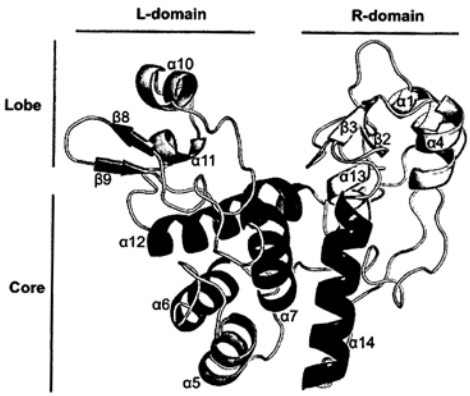

Biological sciences

Biological sciences, Measurements and standards

Genetic engineering / molecular biology

https://worldwide.espacenet.com/patent/search/family/053180702/publication/WO2016173603A1?q=WO2016173603A1

WIPO

Extended patent application

CA2982386A1

27. 4. 2015

Jožef Stefan Institute [SI]

Marko Mihelič, Miha Renko, Dušan Turk

Crystal Structure of Staphylococcus Aureus Autolysin E, Method of Producing the Crystal and Its Use in Screening Methods

https://worldwide.espacenet.com/patent/search/family/053180702/publication/CA2982386A1?q=%20CA2982386A1

Extended patent application

EP3289078A1

27. 4. 2015

Jožef Stefan Institute [SI]

Marko Mihelič, Miha Renko, Dušan Turk

Crystal Structure of Staphylococcus Aureus Autolysin E, Method of Producing the Crystal and Its Use in Screening Methods

https://worldwide.espacenet.com/patent/search/family/053180702/publication/EP3289078A1?q=EP3289078A1

Extended patent application

US10428320B2

27. 4. 2015

Jožef Stefan Institute [SI]

Marko Mihelič, Miha Renko, Dušan Turk

Crystal Structure of Staphylococcus Aureus Autolysin E, Method of Producing the Crystal and Its Use in Screening Methods

https://worldwide.espacenet.com/patent/search/family/053180702/publication/US10428320B2?q=US10428320B2

2014

Predicting Genetically Stable Recombinant Protein Production in Early Cell Line Development

WO2016075216A1

12. 11. 2014

Lek pharmaceuticals d. d. [SI]

Kristina Gruden, Uroš Jamnikar

Predicting Genetically Stable Recombinant Protein Production in Early Cell Line Development

The present invention relates in general to the field of recombinant protein expression. In particular, the present invention relates to a method for selecting a suitable candidate cell clone for recombinant protein expression and to a host cell for recombinant protein expression, the host cell exhibiting artificially modified gene expression of at least one gene selected from the group consisting of: Hist1h2bc, Egrl, BX842664.2/Hist 1h3c, Dhfr, Fgfr2, AC115880.11, Mmp10, Vsnll (optional), CU459186.17, EI 30203 B14Rik, Cspg4, C1qtnf1, Foxp2, and Ptpre.

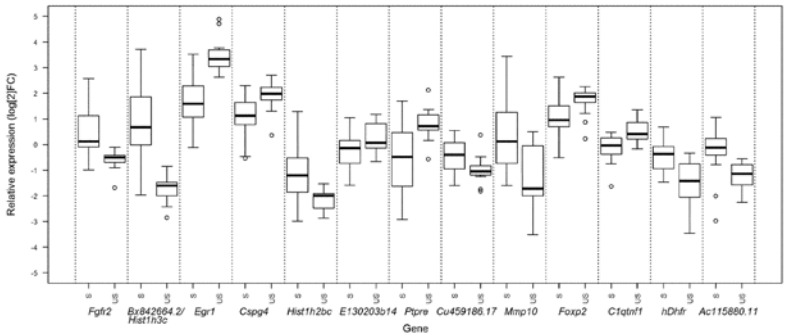

Biological Sciences

Biological sciences, Measurements and standards

Genetic engineering / molecular biology

https://worldwide.espacenet.com/patent/search/family/051947148/publication/WO2016075216A1?q=EP14192809A

WIPO

Extended patent application

DK3218514T3

12. 11. 2015

Lek pharmaceuticals d. d. [SI]

Kristina Gruden, Uroš Jamnikar

Forudsigelse af genetisk stabil rekombinant proteinproduktion i tidlig cellelinieudvikling

https://worldwide.espacenet.com/patent/search/family/051947148/publication/DK3218514T3?q=pn%3DDK3218514T3

Extended patent application

EP3218514B1

12. 11. 2015

Lek pharmaceuticals d. d. [SI]

Kristina Gruden, Uroš Jamnikar

Predicting Genetically Stable Recombinant Protein Production in Early Cell Line Development

https://worldwide.espacenet.com/patent/search/family/051947148/publication/EP3218514B1?q=EP3218514B1

Extended patent application

PL3218514T3

12. 11. 2015

Lek pharmaceuticals d. d. [SI]

Kristina Gruden, Uroš Jamnikar

Predicting Genetically Stable Recombinant Protein Production in Early Cell Line Development

https://worldwide.espacenet.com/patent/search/family/051947148/publication/PL3218514T3?q=pn%3DPL3218514T3

Extended patent application

SI3218514T1

12. 11. 2015

Lek pharmaceuticals d. d. [SI]

Kristina Gruden, Uroš Jamnikar

Napovedovanje proizvodnje genetsko stabilnih rekombinantnih proteinov v zgodnjem razvoju celične linije [SI], Predicting Genetically Stable Recombinant Protein Production in Early Cell Line Development [EN]

https://worldwide.espacenet.com/patent/search/family/051947148/publication/SI3218514T1?q=pn%3DSI3218514T1

Extended patent application

US2017314082A1

12. 11. 2015

Lek pharmaceuticals d. d. [SI]

Kristina Gruden, Uroš Jamnikar

Predicting Genetically Stable Recombinant Protein Production in Early Cell Line Development

https://worldwide.espacenet.com/patent/search/family/051947148/publication/US2017314082A1?q=pn%3DUS2017314082A1

Predicting Productivity in Early Cell Line Development

WO2016075217A1

12. 11. 2014

Lek pharmaceuticals d. d. [SI]

Marjanca Blas, Kristina Gruden, Uroš Jamnikar

Predicting Productivity in Early Cell Line Development

The present invention relates in general to the field of recombinant protein expression. In particular, the present invention relates to a method for selecting a suitable candidate cell clone for recombinant protein expression and to a host cell for recombinant protein expression, the host cell exhibiting artificially modified gene expression of at least one gene selected from the group consisting of: Fkbp10, ZdhhC6, Myrip, Actc1, AC124993.19, Runx2, AC158560.4, PlekhB1, Rps6KA2, Sept1, Sprr2k, and Flt1.

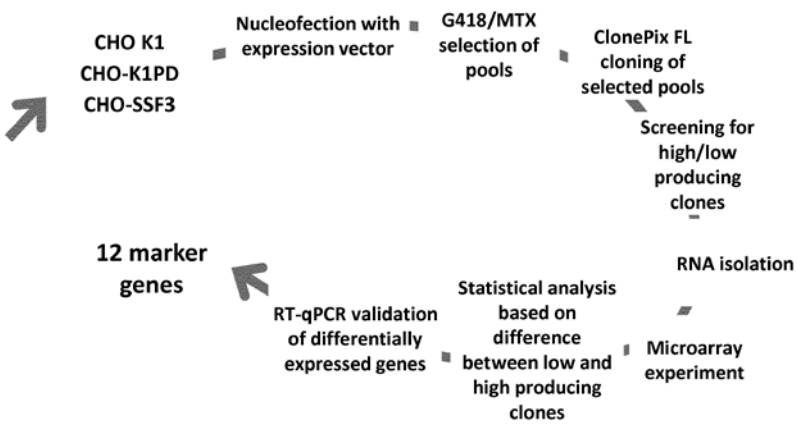

Biological Sciences

Biological sciences, Measurements and standards

Genetic engineering / molecular biology

https://worldwide.espacenet.com/patent/search/family/051947149/publication/WO2016075217A1?q=ep14192810

WIPO

Extended patent application

EP3218478B1

12. 11. 2015

Lek pharmaceuticals d. d. [SI]

Marjanca Blas, Kristina Gruden, Uroš Jamnikar

Predicting Productivity in Early Cell Line Development

https://worldwide.espacenet.com/patent/search/family/051947149/publication/EP3218478B1?q=EP3218478B1

Extended patent application

US2017321288A1

12. 11. 2015

Lek pharmaceuticals d. d. [SI]

Marjanca Blas, Kristina Gruden, Uroš Jamnikar

Predicting Productivity in Early Cell Line Development

https://worldwide.espacenet.com/patent/search/family/051947149/publication/US2017321288A1?q=pn%3DUS2017321288A1

Co-Cultivation of Propionibacterium and Yeast

EP2942397A1

9. 5. 2014

Acies bio d. o. o. [SI], Arima d. o. o. [SI]

Štefan Fujs, Gregor Kosec, Hrvoje Petković, Mirjan Švagelj

Co-Cultivation of Propionibacterium and Yeast

The invention provides a fungal cell, such as a yeast cell, capable of growing in co-cultivation with Propionibacterium. Also provided are methods of

producing such cells and fermentation processes using the fungal cell of the invention and Propionibacterium in co-cultivation. Such co-cultivation significantly reduces the chemical oxygen demand load of the waste fermentation broth.

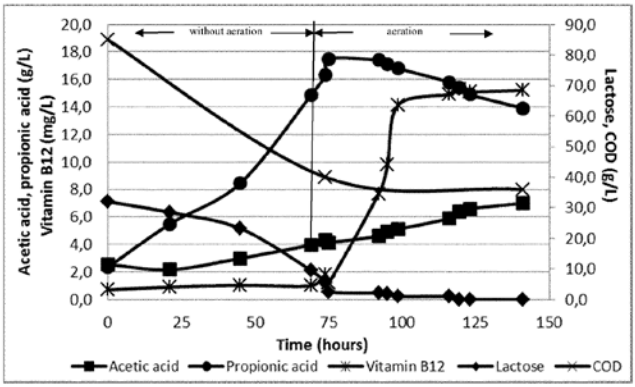

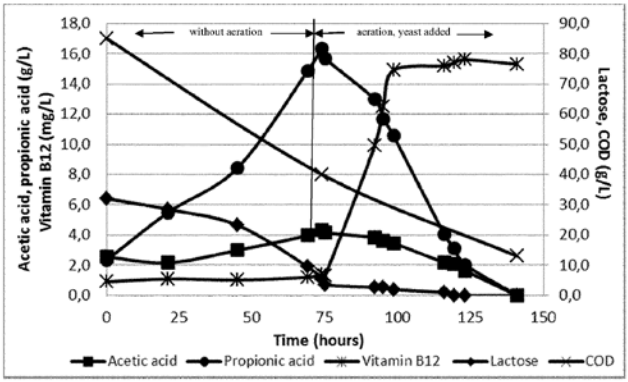

Biological sciences

Biological sciences, Agrofood industry

Genetic engineering / molecular biology, Industrial products, Consumer related

https://worldwide.espacenet.com/patent/search/family/050687312/publication/EP2942397A1?q=ep2942397

EPO

Extended patent application

AU2015257590B2

8. 5. 2015

Acies bio d. o. o. [SI], Arima d. o. o. [SI]

Štefan Fujs, Gregor Kosec, Hrvoje Petković, Mirjan Švagelj

Co-Cultivation of Propionibacterium and Yeast

https://worldwide.espacenet.com/patent/search/family/050687312/publication/AU2015257590B2?q=AU2015257590B2

Extended patent application

CA2948421A1

8. 5. 2015

Acies bio d. o. o. [SI], Arima d. o. o. [SI]

Štefan Fujs, Gregor Kosec, Hrvoje Petković, Mirjan Švagelj

Co-Cultivation of Propionibacterium and Yeast

https://worldwide.espacenet.com/patent/search/family/050687312/publication/CA2948421A1?q=pn%3DCA2948421A1

Extended patent application

CN106536715B

8. 5. 2015

Acies bio d. o. o. [SI], Arima d. o. o. [SI]

Štefan Fujs, Gregor Kosec, Hrvoje Petković, Mirjan Švagelj

Co-Cultivation of Propionibacterium and Yeast

https://worldwide.espacenet.com/patent/search/family/050687312/publication/CN106536715B?q=CN106536715B

Extended patent application

DK3140416T3

8. 5. 2015

Acies bio d. o. o. [SI], Arima d. o. o. [SI]

Štefan Fujs, Gregor Kosec, Hrvoje Petković, Mirjan Švagelj

Samdyrkning af propionibacterium og gær

https://worldwide.espacenet.com/patent/search/family/050687312/publication/DK3140416T3?q=pn%3DDK3140416T3

Extended patent application

EA201692263A1

8. 5. 2015

Acies bio d. o. o. [SI], Arima d. o. o. [SI]

Štefan Fujs, Gregor Kosec, Hrvoje Petković, Mirjan Švagelj

Co-Cultivation of Propionibacterium and Yeast

https://worldwide.espacenet.com/patent/search/family/050687312/publication/EA201692263A1?q=pn%3DEA201692263A1

Extended patent application

WO2015169967A1

8. 5. 2015

Acies bio d. o. o. [SI], Arima d. o. o. [SI]

Štefan Fujs, Gregor Kosec, Hrvoje Petković, Mirjan Švagelj

Co-Cultivation of Propionibacterium and Yeast

https://worldwide.espacenet.com/patent/search/family/050687312/publication/WO2015169967A1?q=pn%3DWO2015169967A1

Extended patent application

ES2698529T3

8. 5. 2015

Acies bio d. o. o. [SI], Arima d. o. o. [SI]

Štefan Fujs, Gregor Kosec, Hrvoje Petković, Mirjan Švagelj

Cocultivo de propionibacterium y levadura

https://worldwide.espacenet.com/patent/search/family/050687312/publication/ES2698529T3?q=pn%3DES2698529T3

Extended patent application

EP3140416B1

8. 5. 2015

Acies bio d. o. o. [SI], Arima d. o. o. [SI]

Štefan Fujs, Gregor Kosec, Hrvoje Petković, Mirjan Švagelj

Cocultivo de propionibacterium y levadura

https://worldwide.espacenet.com/patent/search/family/050687312/publication/EP3140416B1?q=%20EP3140416B1

Extended patent application

HUE040087T2

8. 5. 2015

Acies bio d. o. o. [SI], Arima d. o. o. [SI]

Štefan Fujs, Gregor Kosec, Hrvoje Petković, Mirjan Švagelj

Co-Cultivation of Propionibacterium and Yeast

https://worldwide.espacenet.com/patent/search/family/050687312/publication/HUE040087T2?q=pn%3DHUE040087T2

Extended patent application

JP2017514526A

8. 5. 2015

Acies bio d. o. o. [SI], Arima d. o. o. [SI]

Štefan Fujs, Gregor Kosec, Hrvoje Petković, Mirjan Švagelj

Co-Cultivation of Propionibacterium and Yeast

https://worldwide.espacenet.com/patent/search/family/050687312/publication/JP2017514526A?q=pn%3DJP2017514526A

Extended patent application

KR20170002620A

8. 5. 2015

Acies bio d. o. o. [SI], Arima d. o. o. [SI]

Štefan Fujs, Gregor Kosec, Hrvoje Petković, Mirjan Švagelj

Co-Cultivation of Propionibacterium and Yeast

https://worldwide.espacenet.com/patent/search/family/050687312/publication/KR20170002620A?q=pn%3DKR20170002620A

Extended patent application

MX2016014718A

8. 5. 2015

Acies bio d. o. o. [SI], Arima d. o. o. [SI]

Štefan Fujs, Gregor Kosec, Hrvoje Petković, Mirjan Švagelj

Co-Cultivation of Propionibacterium and Yeast

https://worldwide.espacenet.com/patent/search/family/050687312/publication/MX2016014718A?q=pn%3DMX2016014718A

Extended patent application

PL3140416T3

8. 5. 2015

Acies bio d. o. o. [SI], Arima d. o. o. [SI]

Štefan Fujs, Gregor Kosec, Hrvoje Petković, Mirjan Švagelj

Co-Cultivation of Propionibacterium and Yeast

https://worldwide.espacenet.com/patent/search/family/050687312/publication/PL3140416T3?q=pn%3DPL3140416T3

Extended patent application

PT3140416T

8. 5. 2015

Acies bio d. o. o. [SI], Arima d. o. o. [SI]

Štefan Fujs, Gregor Kosec, Hrvoje Petković, Mirjan Švagelj

Co-Cultivation of Propionibacterium and Yeast

https://worldwide.espacenet.com/patent/search/family/050687312/publication/PT3140416T?q=pn%3DPT3140416T

Extended patent application

SI3140416T1

8. 5. 2015

Acies bio d. o. o. [SI], Arima d. o. o. [SI]

Štefan Fujs, Gregor Kosec, Hrvoje Petković, Mirjan Švagelj

Kokultivacija propionibakterije in kvasovke [SL], Co-Cultivation of Propionibacterium and Yeast [EN]

https://worldwide.espacenet.com/patent/search/family/050687312/publication/SI3140416T1?q=pn%3DSI3140416T1

Extended patent application

US9938554B2

8. 5. 2015

Acies bio d. o. o. [SI], Arima d. o. o. [SI]

Štefan Fujs, Gregor Kosec, Hrvoje Petković, Mirjan Švagelj

Co-Cultivation of Propionibacterium and Yeast

https://worldwide.espacenet.com/patent/search/family/050687312/publication/US9938554B2?q=US9938554B2

Extended patent application

ZA201608104B

23. 11. 2016

Acies bio d. o. o. [SI], Arima d. o. o. [SI]

Štefan Fujs, Gregor Kosec, Hrvoje Petković, Mirjan Švagelj

Co-Cultivation of Propionibacterium and Yeast

https://worldwide.espacenet.com/patent/search/family/050687312/publication/ZA201608104B?q=pn%3DZA201608104B

2013

Stable Pantetheine Derivatives for the Treatment of Pantothenate Kinase Associated Neurodegeneration (PKAN) And Methods for The Synthesis of Such Compounds

EP2868662A1

4. 11. 2013

The University Medical Center Groningen [NL], Acies Bio d. o. o. [SI], University of Groningen [NL]

Branko Jenko, Gregor Kosec, Hrvoje Petković, Ajda Podgoršek Berke, Oda Cornelia Maria Sibon, Balaji Srinivasan

Stable Pantetheine Derivatives for the Treatment of Pantothenate Kinase Associated Neurodegeneration (PKAN) And Methods for The Synthesis of Such Compounds

The present invention relates to (S)-acyl-4'-phosphopantetheine derivatives, methods of their synthesis, and related medical uses of such compounds. Preferred medical uses relate to the treatment of neurodegenerative diseases, such as PKAN.

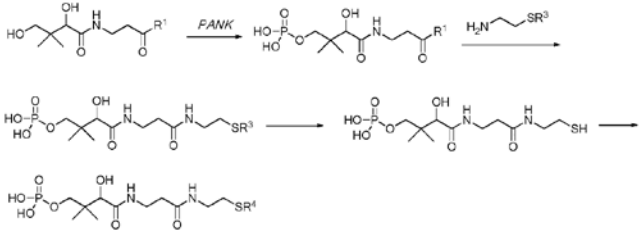

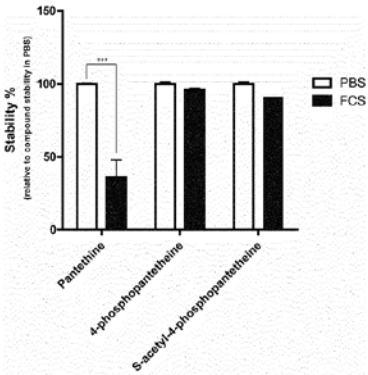

Biological Sciences

Biological sciences, Protecting man and environment

Medical / health related

https://worldwide.espacenet.com/patent/search/family/049518786/publication/EP2868662A1?q=EP20130191457

EPO

Extended patent application

AU2014343730B2

29. 10. 2014

The University Medical Center Groningen [NL], Acies Bio d. o. o. [SI], University of Groningen [NL]

Alen Čusak, Branko Jenko, Gregor Kosec, Jerca Pahor, Hrvoje Petković, Ajda Podgoršek Berke, Oda Cornelia Maria Sibon, Balaji Srinivasan

Stable Pantetheine Derivatives for the Treatment of Pantothenate Kinase Associated Neurodegeneration (PKAN) And Methods for the Synthesis of Such Compounds

https://worldwide.espacenet.com/patent/search/family/049518786/publication/AU2014343730B2?q=pn%3DAU2014343730B2

Extended patent application

CA2929369A1

29. 10. 2014

The University Medical Center Groningen [NL], Acies Bio d. o. o. [SI], University of Groningen [NL]

Alen Čusak, Branko Jenko, Gregor Kosec, Jerca Pahor, Hrvoje Petković, Ajda Podgoršek Berke, Oda Cornelia Maria Sibon, Balaji Srinivasan

Stable Pantetheine Derivatives for the Treatment of Pantothenate Kinase Associated Neurodegeneration (PKAN) And Methods for the Synthesis of Such Compounds

https://worldwide.espacenet.com/patent/search/family/049518786/publication/CA2929369A1?q=pn%3DCA2929369A1

Extended patent application

CN105764909A

29. 10. 2014

The University Medical Center Groningen [NL], Acies Bio d. o. o. [SI], University of Groningen [NL]

Alen Čusak, Branko Jenko, Gregor Kosec, Jerca Pahor, Hrvoje Petković, Ajda Podgoršek Berke, Oda Cornelia Maria Sibon, Balaji Srinivasan

Stable Pantetheine Derivatives for the Treatment of Pantothenate Kinase Associated Neurodegeneration (PKAN) And Methods for the Synthesis of Such Compounds

https://worldwide.espacenet.com/patent/search/family/049518786/publication/CN105764909A?q=pn%3DCN105764909A

Extended patent application

DK3066106T3

29. 10. 2014

The University Medical Center Groningen [NL], Acies Bio d. o. o. [SI], University of Groningen [NL]

Alen Čusak, Branko Jenko, Gregor Kosec, Jerca Pahor, Hrvoje Petković, Ajda Podgoršek Berke, Oda Cornelia Maria Sibon, Balaji Srinivasan

Stabile pantetheinderivater til behandling af pantothenatkinase-associeret neurodegeneration (PKAN) og fremgangsmåder til syntese af sådanne forbindelser

https://worldwide.espacenet.com/patent/search/family/049518786/publication/DK3066106T3?q=pn%3DDK3066106T3

Extended patent application

WO2015063177A1

29. 10. 2014

Academisch Ziekenhuis Groningen [NL], Acies Bio d. o. o., Rijksuniversiteit Groningen [NL]

Alen Čusak, Branko Jenko, Gregor Kosec, Jerca Pahor, Hrvoje Petković, Ajda Podgoršek Berke, Oda Cornelia Maria Sibon, Balaji Srinivasan

Stable Pantetheine Derivatives for the Treatment of Pantothenate Kinase Associated Neurodegeneration (PKAN) And Methods for the Synthesis of Such Compounds

https://worldwide.espacenet.com/patent/search/family/049518786/publication/WO2015063177A1?q=pn%3DWO2015063177A1

Extended patent application

ES2743921T3

29. 10. 2014

The University Medical Center Groningen [NL], Acies Bio d. o. o. [SI], University of Groningen [NL]

Alen Čusak, Branko Jenko, Gregor Kosec, Jerca Pahor, Hrvoje Petković, Ajda Podgoršek Berke, Oda Cornelia Maria Sibon, Balaji Srinivasan

Derivados de panteteína estables para el tratamiento de la neurodegeneración asociada a pantotenato quinasa (PKAN) y métodos para la síntesis de tales compuestos

https://worldwide.espacenet.com/patent/search/family/049518786/publication/ES2743921T3?q=pn%3DES2743921T3

Extended patent application

JP6568536B2

29. 10. 2014

The University Medical Center Groningen [NL], Acies Bio d. o. o. [SI], University of Groningen [NL]

Alen Čusak, Branko Jenko, Gregor Kosec, Jerca Pahor, Hrvoje Petković, Ajda Podgoršek Berke, Oda Cornelia Maria Sibon, Balaji Srinivasan

Stable Pantetheine Derivatives for the Treatment of Pantothenate Kinase Associated Neurodegeneration (PKAN) And Methods for the Synthesis of Such Compounds

https://worldwide.espacenet.com/patent/search/family/049518786/publication/JP6568536B2?q=%20JP6568536B2

Extended patent application

US9963472B2

29. 10. 2014

The University Medical Center Groningen [NL], Acies Bio d. o. o. [SI], University of Groningen [NL]

Alen Čusak, Branko Jenko, Gregor Kosec, Jerca Pahor, Hrvoje Petković, Ajda Podgoršek Berke, Oda Cornelia Maria Sibon, Balaji Srinivasan

Stable Pantetheine Derivatives for the Treatment of Pantothenate Kinase Associated Neurodegeneration (PKAN) And Methods for the Synthesis of Such Compounds

https://worldwide.espacenet.com/patent/search/family/049518786/publication/US9963472B2?q=US9963472B2

Extended patent application

EP3066106B1

29. 10. 2014

The University Medical Center Groningen [NL], Acies Bio d. o. o. [SI], University of Groningen [NL]

Alen Čusak, Branko Jenko, Gregor Kosec, Jerca Pahor, Hrvoje Petković, Ajda Podgoršek Berke, Oda Cornelia Maria Sibon, Balaji Srinivasan

Stable Pantetheine Derivatives for the Treatment of Pantothenate Kinase Associated Neurodegeneration (PKAN) And Methods for the Synthesis of Such Compounds

https://worldwide.espacenet.com/patent/search/family/049518786/publication/EP3066106B1?q=%20EP3066106B1

Composition and Method for Plant Protection

SI24489A

23. 10. 2013

National institute of Biology [SI], Jožef Stefan Institute [SI]

Jana Erjavec, Tanja Dreo, Jerica Sabotič, Jože Brzin, Janko Kos, Maja Ravnikar

Kompozicija in metoda za zaščito rastlin [SL], Composition and Method for Plant Protection [EN]

The invention relates to 13 protein mushroom extracts and 1 protein extract from mycelium with antibacterial activity against R. solanacearum that have shown activity in tests. Moreover, an A. phalloides protein fraction also completely inhibited bacterial growth. The extracts and fractions not only displayed potent inhibition of bacterial multiplication but more commonly displayed bactericidal effect, rather than bacteristatic. In vivo testing of 5 selected extracts on tomato and potato plants lead to conclusions, that C. geotropa, S. variegatus and T. saponaceum extracts lower disease occurrence and delay bacterial wilting on both tomato and potato plants. Thus, mushroom protein extracts of the present invention are an important tool to treat bacterial wilt caused by R. solanacearum. Moreover inhibition of 12 R. solanacearum strains as well as R. mannitolilytica and E. coli by mushroom protein extracts proves their broad spectrum activity, which could be beneficial in the fields of medicine, biotechnology, waste management/bioremediation and agriculture.

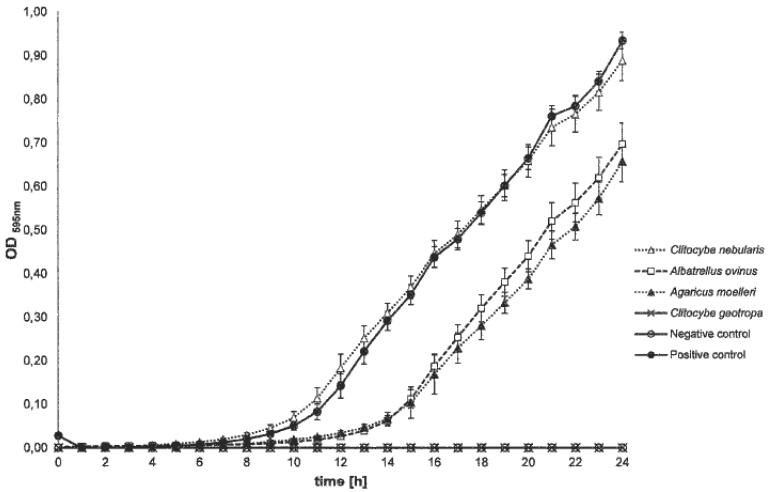

Biological Sciences

Biological sciences

Genetic engineering / molecular biology

https://worldwide.espacenet.com/publicationDetails/originalDocument?FT=D&date=20150430&DB=&locale=en_EP&CC=SI&NR=24489A&KC=A&ND=5

UIL RS

Extended patent application

WO2015058944A1

2. 10. 2014

National Institute of Biology [SI], Jožef Stefan Institute [SI]

Jana Erjavec, Tanja Dreo, Jerica Sabotič, Jože Brzin, Janko Kos, Maja Ravnikar

Composition and Method for Plant Protection

https://worldwide.espacenet.com/publicationDetails/biblio?FT=D&date=20150430&DB=&locale=en_EP&CC=WO&NR=2015058944A1&KC=A1&ND=4

Caspase-1 Imaging Probes

EP2848696A1

13. 9. 2013

Sanofi-Aventis Deutschland GmbH [DE], European Molecular Biology Laboratory [DE], Jožef Stefan Institute [SI]

Gopal Datta, Carsten Schultz, Oliver Plettenburg, Michael Kurz, Michael Podeschwa, Guenter Billen, Herbert Kogler, Boris Turk, Matej Vizovišek

Caspase-1 Imaging Probes

The present invention relates to molecular probes of the formula (I) as defined herein that allow for the observation of the catalytic activity caspase-1 in in vitro assays, in cells or in multicellular organisms, and the use thereof in medicine.

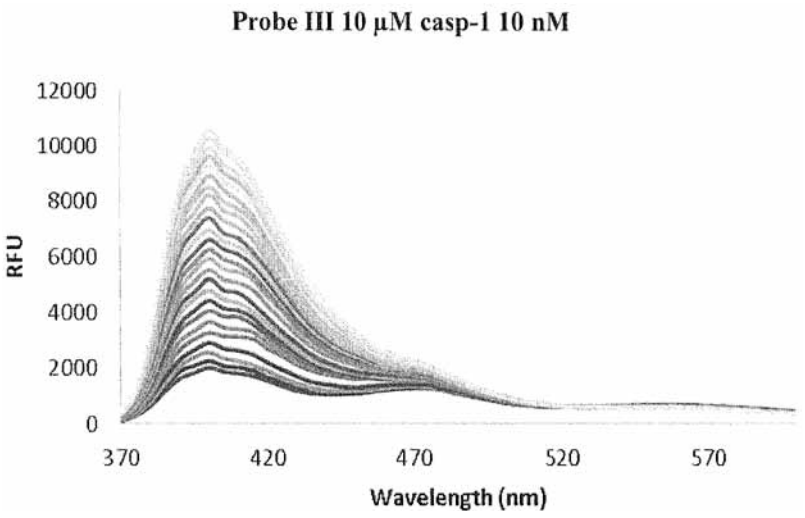

Biological Sciences

Biological sciences

Genetic engineering / molecular biology, Medical / health related

https://worldwide.espacenet.com/publicationDetails/biblio?FT=D&date=20150318&DB=&locale=en_EP&CC=EP&NR=2848696A1&KC=A1&ND=4

EPO

Anti-Jagged 1/Jagged 2 Cross-Reactive Antibodies, Activatable Anti-Jagged Antibodies and Methods of Use Thereof

US9127053B2

21. 6. 2013

CytomX Therapeutics Inc. [US]

Paul H. Bessette, Bernard Henry Lowman, Mary Elizabeth-Edna Menendez, Gary Jason Sagert, Nancy E. Stagliano, Olga Vasiljeva, William James West

Anti-Jagged 1/Jagged 2 Cross-Reactive Antibodies, Activatable Anti-Jagged Antibodies and Methods of Use Thereof

This invention relates generally to the generation of antibodies, e.g., monoclonal antibodies including fully human monoclonal antibodies, that recognize Jagged 1 and/or Jagged 2, to antibodies, e.g., monoclonal antibodies including fully human antibodies that recognize Jagged 1 and/or Jagged 2, and nucleic acid molecules that encode antibodies, e.g., nucleic acid molecules that encode monoclonal antibodies including fully human cross-reactive antibodies that recognize both Jagged 1 and Jagged 2, and to methods of making the anti-Jagged antibodies and methods of using the anti-Jagged antibodies as therapeutics, prophylactics, and diagnostics. The invention also relates generally to activatable antibodies that include a masking moiety (MM), a cleavable moiety (CM), and an antibody (AB) that specifically bind to Jagged 1 and Jagged 2, and to methods of making and using these activatable anti-Jagged antibodies in a variety of therapeutic, diagnostic and prophylactic indications.

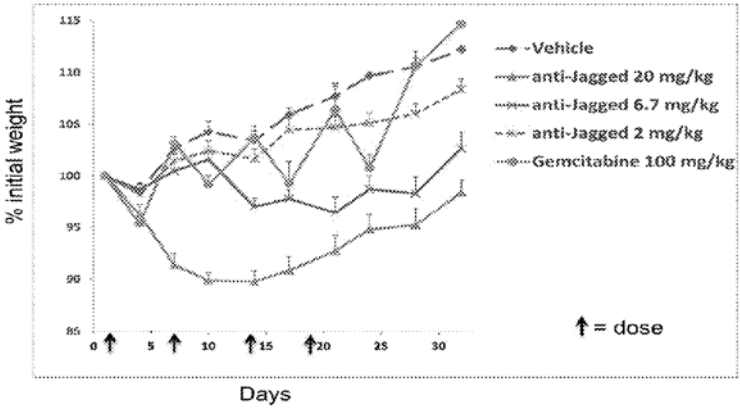

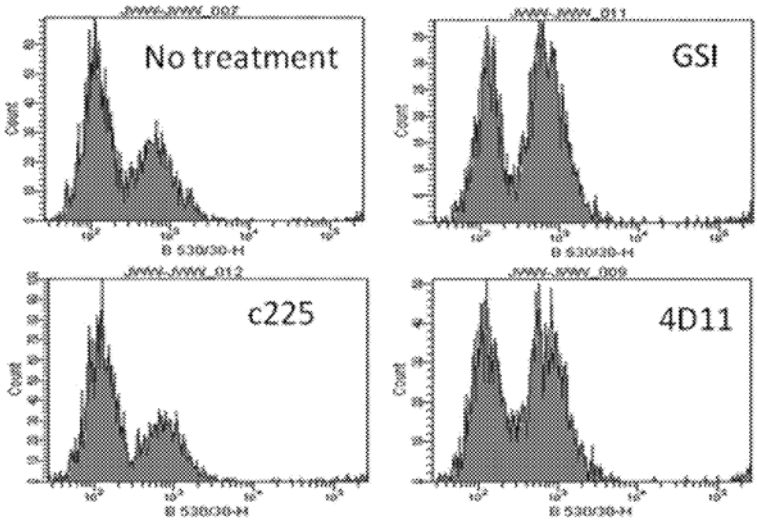

Biological Sciences

Biological sciences

Medical / health related, Genetic engineering / molecular biology

https://worldwide.espacenet.com/patent/search/family/049769724/publication/US9127053B2?q=us9127053

US

Extended patent application

AU2013278075B2

21. 6. 2013

Cytomx Therapeutics Inc. [US]

Paul H. Bessette, Henry Bernard Lowman, Mary Elizabeth-Edna Menendez, Gary Jason Sagert, Nancy E. Stagliano, Olga Vasiljeva, William James West

Anti-Jagged 1/Jagged 2 Cross-Reactive Antibodies, Activatable Anti-Jagged Antibodies and Methods of Use Thereof

https://worldwide.espacenet.com/patent/search/family/049769724/publication/AU2013278075B2?q=AU2013278075B2

Extended patent application

BR112014031689A2

21. 6. 2013

CytomX Therapeutics Inc. [US]

Paul H. Bessette, Henry Bernard Lowman, Mary Elizabeth-Edna Menendez, Gary Jason Sagert, Nancy E. Stagliano, Olga Vasiljeva, William James West

Anticorpos reativos cruzados anti-jagged 1/jagged 2, anticorpos anti-jagged ativáveis e métodos de uso deles

https://worldwide.espacenet.com/patent/search/family/049769724/publication/BR112014031689A2?q=pn%3DBR112014031689A2

Extended patent application

CA2876904C

21. 6. 2013

CytomX Therapeutics Inc. [US]

Paul H. Bessette, Henry Bernard Lowman, Mary Elizabeth-Edna Menendez, Gary Jason Sagert, Nancy E. Stagliano, Olga Vasiljeva, William James West

Anti-Jagged 1/Jagged 2 Cross-Reactive Antibodies, Activatable Anti-Jagged Antibodies and Methods of Use Thereof

https://worldwide.espacenet.com/patent/search/family/049769724/publication/CA2876904C?q=CA2876904C

Extended patent application

CN104661677A

21. 6. 2013

CytomX Therapeutics Inc. [US]

Paul H. Bessette, Henry Bernard Lowman, Mary Elizabeth-Edna Menendez, Gary Jason Sagert, Nancy E. Stagliano, Olga Vasiljeva, William James West

Anti-Jagged 1/Jagged 2 Cross-Reactive Antibodies, Activatable Anti-Jagged Antibodies and Methods of Use Thereof

https://worldwide.espacenet.com/patent/search/family/049769724/publication/CN104661677A?q=pn%3DCN104661677A

Extended patent application

CO7151488A2

21. 6. 2013

CytomX Therapeutics Inc. [US]

Paul H. Bessette, Henry Bernard Lowman, Mary Elizabeth-Edna Menendez, Gary Jason Sagert, Nancy E. Stagliano, Olga Vasiljeva, William James West

Anticuerpos de reacción cruzada anti-jagged1/jagged 2, anticuerpos anti-jagged activables y métodos de uso de los mismos

https://worldwide.espacenet.com/patent/search/family/049769724/publication/CO7151488A2?q=pn%3DCO7151488A2

Extended patent application

EP2863948B1

21. 6. 2013

CytomX Therapeutics Inc. [US]

Paul H. Bessette, Henry Bernard Lowman, Mary Elizabeth-Edna Menendez, Gary Jason Sagert, Nancy E. Stagliano, Olga Vasiljeva, William James West

Anti-Jagged 1/Jagged 2 Cross-Reactive Antibodies, Activatable Anti-Jagged Antibodies and Methods of Use Thereof

https://worldwide.espacenet.com/patent/search/family/049769724/publication/EP2863948B1?q=EP2863948B1

Extended patent application

HK1204576A1

1. 6. 2015

CytomX Therapeutics Inc. [US]

Paul H. Bessette, Henry Bernard Lowman, Mary Elizabeth-Edna Menendez, Gary Jason Sagert, Nancy E. Stagliano, Olga Vasiljeva, William James West

Anti-Jagged 1/Jagged 2 Cross-Reactive Antibodies, Activatable Anti-Jagged Antibodies and Methods of Use Thereof

https://worldwide.espacenet.com/patent/search/family/049769724/publication/HK1204576A1?q=pn%3DHK1204576A1

Extended patent application

IN2635MUN2014A

26. 12. 2014

Cytomx Therapeutics Inc. [US]

Paul H. Bessette, Henry Bernard Lowman, Mary Elizabeth-Edna Menendez, Gary Jason Sagert, Nancy E. Stagliano, Olga Vasiljeva, William James West

Anti-Jagged 1/Jagged 2 Cross-Reactive Antibodies, Activatable Anti-Jagged Antibodies and Methods of Use Thereof

https://worldwide.espacenet.com/patent/search/family/049769724/publication/IN2635MUN2014A?q=pn%3DIN2635MUN2014A

Extended patent application

JP2015521625A

21. 6. 2013

CytomX Therapeutics Inc. [US]

Paul H. Bessette, Henry Bernard Lowman, Mary Elizabeth-Edna Menendez, Gary Jason Sagert, Nancy E. Stagliano, Olga Vasiljeva, William James West

Anti-Jagged 1/Jagged 2 Cross-Reactive Antibodies, Activatable Anti-Jagged Antibodies and Methods of Use Thereof

https://worldwide.espacenet.com/patent/search/family/049769724/publication/JP2015521625A?q=pn%3DJP2015521625A

Extended patent application

KR20150037857A

21. 6. 2013

CytomX Therapeutics Inc. [US]

Paul H. Bessette, Henry Bernard Lowman, Mary Elizabeth-Edna Menendez, Gary Jason Sagert, Nancy E. Stagliano, Olga Vasiljeva, William James West

Anti-Jagged 1/Jagged 2 Cross-Reactive Antibodies, Activatable Anti-Jagged Antibodies and Methods of Use Thereof

https://worldwide.espacenet.com/patent/search/family/049769724/publication/KR20150037857A?q=pn%3DKR20150037857A

Extended patent application

MX2014016038A

21. 6. 2013

CytomX Therapeutics Inc. [US]

Paul H. Bessette, Henry Bernard Lowman, Mary Elizabeth-Edna Menendez, Gary Jason Sagert, Nancy E. Stagliano, Olga Vasiljeva, William James West

Anti-Jagged 1/Jagged 2 Cross-Reactive Antibodies, Activatable Anti-Jagged Antibodies and Methods of Use Thereof

https://worldwide.espacenet.com/patent/search/family/049769724/publication/MX2014016038A?q=pn%3DMX2014016038A

Extended patent application

PE20150643A1

21. 6. 2013

CytomX Therapeutics Inc. [US]

Paul H. Bessette, Henry Bernard Lowman, Mary Elizabeth-Edna Menendez, Gary Jason Sagert, Nancy E. Stagliano, Olga Vasiljeva, William James West

Anticuerpos de reaccion cruzada anti-jagged 1/jagged 2 anticuerpos anti-jagged activables y metodos de uso de los mismos

https://worldwide.espacenet.com/patent/search/family/049769724/publication/PE20150643A1?q=pn%3DPE20150643A1

Extended patent application

PH12015500125A1

21. 1. 2015

CytomX Therapeutics Inc. [US]

Paul H. Bessette, Henry Bernard Lowman, Mary Elizabeth-Edna Menendez, Gary Jason Sagert, Nancy E. Stagliano, Olga Vasiljeva, William James West

Anti-Jagged 1/Jagged 2 Cross-Reactive Antibodies, Activatable Anti-Jagged Antibodies and Methods of Use Thereof

https://worldwide.espacenet.com/patent/search/family/049769724/publication/PH12015500125A1?q=pn%3DPH12015500125A1

Extended patent application

RU2015101803A

21. 6. 2013

CytomX Therapeutics Inc. [US]

Paul H. Bessette, Henry Bernard Lowman, Mary Elizabeth-Edna Menendez, Gary Jason Sagert, Nancy E. Stagliano, Olga Vasiljeva, William James West

Anti-Jagged 1/Jagged 2 Cross-Reactive Antibodies, Activatable Anti-Jagged Antibodies and Methods of Use Thereof

https://worldwide.espacenet.com/patent/search/family/049769724/publication/RU2015101803A?q=pn%3DRU2015101803A

Extended patent application

SG11201408554QA

21. 6. 2013

CytomX Therapeutics Inc. [US]

Paul H. Bessette, Henry Bernard Lowman, Mary Elizabeth-Edna Menendez, Gary Jason Sagert, Nancy E. Stagliano, Olga Vasiljeva, William James West

Anti-Jagged 1/Jagged 2 Cross-Reactive Antibodies, Activatable Anti-Jagged Antibodies and Methods of Use Thereof

https://worldwide.espacenet.com/patent/search/family/049769724/publication/SG11201408554QA?q=pn%3DSG11201408554QA

Extended patent application

WO2013192550A3

21. 6. 2013

CytomX Therapeutics Inc. [US]

Paul H. Bessette, Henry Bernard Lowman, Mary Elizabeth-Edna Menendez, Gary Jason Sagert, Nancy E. Stagliano, Olga Vasiljeva, William James West

Anti-Jagged 1/Jagged 2 Cross-Reactive Antibodies, Activatable Anti-Jagged Antibodies and Methods of Use Thereof

https://worldwide.espacenet.com/patent/search/family/049769724/publication/WO2013192550A3?q=%20WO2013192550A3

Low-Dimensional Structures of Organic and /or Inorganic Substances and Use Thereof

RU2560432C2

20. 5. 2013

Institute of Strength Physics and Materials Science of Siberian Branch of Russian Academy of Sciences [RU], Jožef Stefan Institute [SI]

Marat Izrailyevich Lerner, Sergey Grigoryevich Psakhye, Elena Glazkova Alekseevna, Olga Vladimirovna Bakina, Olga Sergeevna Vasilyeva, Georgy Andreevich Mikhaylov, Boris Turk

Low-Dimensional Structures of Organic and /or Inorganic Substances and Use Thereof

The object of the present invention is low-dimensional, primarily 2D folded structures of organic and /or inorganic substances and /or their agglomerates, which have folds and faces of irregular shape and exhibit high local electric field strength generated by surface charges on the said folds, faces and edges, and use thereof: as sorbents of organic particles (molecules, bacteria, viruses, proteins, antigens, endotoxins) and inorganic particles (metal ions, colloids); as an agent with wound healing and antibacterial activity; as an agent for tumor cell growth inhibition.

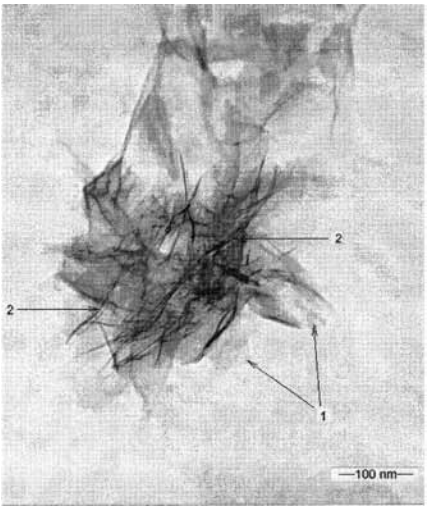

Biological Sciences

Biological sciences

Genetic engineering / molecular biology, Medical / health related

https://worldwide.espacenet.com/publicationDetails/originalDocument?FT=D&date=20150820&DB=&locale=en_EP&CC=RU&NR=2560432C2&KC=C2&ND=4

RU

Extended patent application

WO2014189412A1

19. 5. 2014

Institute of Strength Physics and Materials Science of Siberian Branch of Russian Academy of Sciences [RU], Jožef Stefan Institute [SI]

Marat Izrailyevich Lerner, Sergey Grigoryevich Psakhye, Elena Glazkova Alekseevna, Olga Vladimirovna Bakina, Olga Sergeevna Vasilyeva, Georgy Andreevich Mikhaylov, Boris Turk

Low-Dimensional Structures of Organic and /or Inorganic Substances and Use Thereof

https://worldwide.espacenet.com/publicationDetails/biblio?FT=D&date=20141127&DB=&locale=en_EP&CC=WO&NR=2014189412A1&KC=A1&ND=4

Extended patent application

EA035516B1

19. 5. 2014

Institute of Strength Physics and Materials Science of Siberian Branch of Russian Academy of Sciences [RU], Jožef Stefan Institute [SI], National Research Tomsk Polytechnic University [RU]

Marat Izrailyevich Lerner, Sergey Grigoryevich Psakhye, Elena Glazkova Alekseevna, Olga Vladimirovna Bakina, Olga Sergeevna Vasilyeva, Georgy Andreevich Mikhaylov, Boris Turk

Use of Low-dimensional Structures and /or Their Agglomerates Formed from Metal Oxyhydroxides or Their Composites as an Agent to Inhibit Tumor Cell Proliferation

https://worldwide.espacenet.com/patent/search/family/051933849/publication/EA035516B1?q=EA035516B1

Extended patent application

DE112014002481T5

19. 5. 2014

Institute of Strength Physics and Materials Science of Siberian Branch of Russian Academy of Sciences [RU], Jožef Stefan Institute [SI], National Research Tomsk Polytechnic University [RU]

Sergey Grigorievich Psakhie, Marat Izrailievich Lerner, Elena Alekseevna Glazkova, Georgy Andreevich Mikhaylov, Boris Turk, Olga Vladimirovna Bakina, Olga Vasiljeva

Niederdimensionale Strukturen organischer und /oder anorganischer Stoffe und ihre Verwendung [DE], Low-Dimensional Structures of Organic and /or Inorganic Substances and Use Thereof [EN]

https://worldwide.espacenet.com/publicationDetails/originalDocument?FT=D&date=20160303&DB=&locale=en_EP&CC=DE&NR=112014002481T5&KC=T5&ND=4

Extended patent application

US10105318B2

19. 11. 2015

Institute of Strength Physics and Materials Science of Siberian Branch of Russian Academy of Sciences [RU], Jožef Stefan Institute [SI], National Research Tomsk Polytechnic University [RU]

Sergey G. Psakhie, Marat I. Lerner, Elena A. Glazkova, Olga V. Bakina, Olga Vasiljeva, Georgy A. Mikhaylov, Boris Turk

Low-Dimensional Structures of Organic and /or Inorganic Substances and Use Thereof

https://worldwide.espacenet.com/patent/search/family/051933849/publication/US10105318B2?q=US10105318

Overproducing Recombinant Form of Pernisine in Heterologous Expression System

SI24364A

6. 5. 2013

The Centre of Excellence for Integrated Approaches in Chemistry and Biology of Proteins (CIPKeBiP) [SI], Biotechnical Faculty, University of Ljubljana [SI], Jožef Stefan Institute [SI]

Marko Šnajder, Nataša Poklar Ulrih, Marko Mihelič, Dušan Turk

Čezmerna produkcija rekombinantne oblike pernizina v heterolognem ekspresijskem sistemu [SL], Overproducing Recombinant Form of Pernisine in Heterologous Expression System [EN]

The present invention with a modified DNA sequence for the in vitro expression of recombinant protease from Aeropyrum pernix K1, perinine in the heterologous expression system. In addition, the invention relates to a process for the preparation of subtilysin-like protease using recombinant DNA techniques.

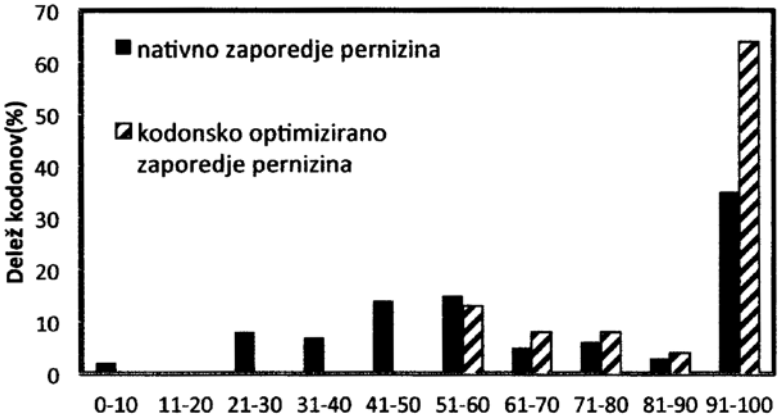

Biological sciences

Biological sciences, Protecting man and environment

Medical / health related, Genetic engineering / molecular biology

https://worldwide.espacenet.com/patent/search/family/051946244/publication/SI24364A?q=SI24364A

UIL RS***

*** On the patent granted by the Slovenian Intellectual Property Office (SIPO) Jožef Stefan Institute is stated as one of the three Applicants. But in the Espacenet database the data is inadequately presented and only "Center odličnosti za integrirane pristope v kemiji in biologiji proteinov (CO CiPKeBIP) and Biotehniška fakulteta Univerze v Ljubljani" are stated as the applicants which is not correct.

2012

Chemical Hybridization of Hermaphrodite Plant Species with Easily Soluble Derivatives of Oxanilic Acid

SI24033A

24. 4. 2012

Titan Primož [SI], Semenarna Ljubljana d. d. [SI], Jožef Stefan Institute [SI], The Agricultural Institute of Slovenia [SI]

Primož Titan, Jernej Iskra, Vladimir Meglič

Kemična hibridizacija hermafroditnih rastlinskih vrst z lahkotopnimi derivati oksanilne kisline [SL], Chemical Hybridization of Hermaphrodite Plant Species with Easily Soluble Derivatives of Oxanilic Acid [EN]

The present invention refers to a chemical way of exploiting a heterosis in commercially significant hermaphrodite plant species, especially common wheat (lat. Triticum aestivum L.), in which easily soluble or water-soluble derivatives of oxanilic acid of general Formula (I) and/or agriculturally acceptable water-soluble salts thereof or water-soluble preparations that contain them are used as an active chemical hybridization substance. The invention further refers to a method for the production of hybrid seeds of F1 generation of commercially significant hermaphrodite plant species, especially common wheat, with chemical hybridization with easily soluble compounds of general Formula (I) and/or the agriculturally acceptable water-soluble salts thereof, which makes it possible, unlike the ways used hithereto, a simpler design of a seed crop for the production of hybrid seeds of F1 generation, better spatial exploitation, better pollination of the female component (line AA) and a greater quantity of seeds of the desired F1 generation based on the sown quantity of both parent components.

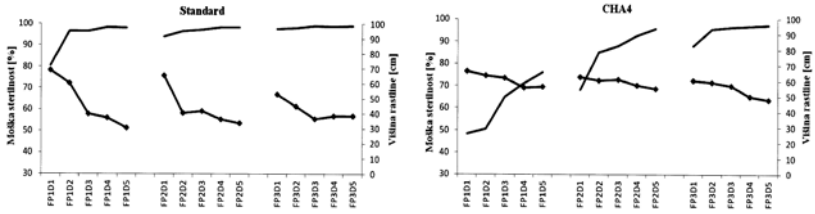

Biological Sciences

Biological sciences, Agriculture and marine resources

Genetic engineering / Molecular biology, Other

https://worldwide.espacenet.com/publicationDetails/originalDocument?FT=D&date=20131030&DB=&locale=en_EP&CC=SI&NR=24033A&KC=A&ND=4

UIL RS

Extended patent application

WO2013162479A1

31. 5. 2012

Titan Primož [SI], Semenarna Ljubljana d. d., [SI], Jožef Stefan Institute [SI], The Agricultural Institute of Slovenia [SI], Iskra Jernej [SI], Meglič Vladimir [SI]

Primož Titan, Jernej Iskra, Vladimir Meglič

Chemical Hybridization of Hermaphrodite Plant Species with Easily Soluble Derivatives of Oxanilic Acid

https://worldwide.espacenet.com/publicationDetails/biblio?FT=D&date=20131031&DB=&locale=en_EP&CC=WO&NR=2013162479A1&KC=A1&ND=4

Oxide Ferrimagnetics with Spinel Structure Nanoparticles and Iron Oxide Nanoparticles, Biocompatible Aqueous Colloidal Systems Comprising Nanoparticles, Ferriliposomes, and Uses Thereof

WO2013019151A3

3. 8. 2012

Jožef Stefan Institute [SI], Tomsk Scientific Center, Siberian Branch of the Russian Academy of Sciences [RU], Itin Volya Isaevich [RU], Anna Alekseevna Magaeva [RU], Mojca Urška Mikac [SI], Georgy Andreevich Mikhaylov [SI], Evgeniy Petrovich Naiden [RU], Sergey Grigorievich Psakhie [RU], Olga Georgievna Terekhova [RU], Boris Turk [SI], Olga Vasiljeva [SI]

Volya Isaevich Itin, Anna Alekseevna Magaeva, Mojca Urška Mikac, Georgy Andreevich Mikhaylov, Evgeniy Petrovich Naiden, Sergey Grigorievich Psakhie, Olga Georgievna Terekhova, Boris Turk, Olga Vasiljeva

Oxide Ferrimagnetics with Spinel Structure Nanoparticles and Iron Oxide Nanoparticles, Biocompatible Aqueous Colloidal Systems Comprising Nanoparticles, Ferriliposomes, and Uses Thereof

The present invention relates to methods for producing oxide ferrimagnetics with spinel structure and iron oxide nanoparticles by soft mechanochemical synthesis using inorganic salt hydrates, oxide ferrimagnetics with spinel structure and iron oxide nanoparticles of ultra-small size and high specific surface area obtainable by the methods, biocompatible aqueous colloidal systems comprising oxide ferrimagnetics with spinel structure and iron oxide nanoparticles, carriers comprising oxide ferrimagnetics with spinel structure and iron oxide nanoparticles, and uses thereof in medicine.

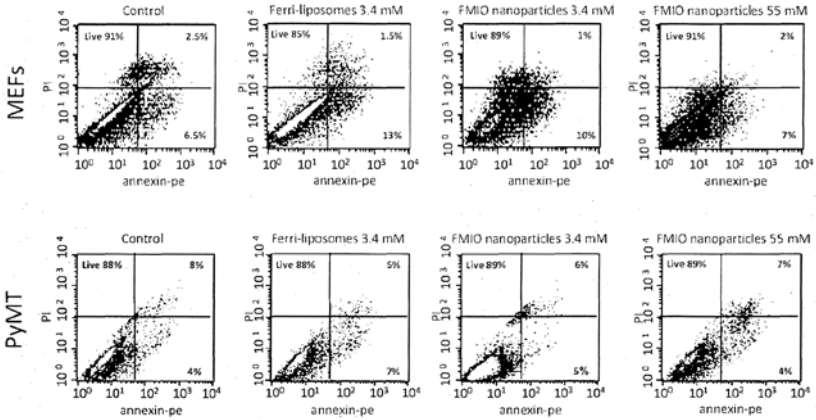

Biological Sciences

Biological sciences

Medical / health related

https://worldwide.espacenet.com/patent/search/family/047629828/publication/WO2013019151A3?q=WO2013019151A3

WIPO

Extended patent application

BR112014002755A2

3. 8. 2012

Institute of Strength Physics and Materials Science, Siberian Branch of the Russian Academy of Sciences [RU], Jožef Stefan Institute [SI]

Anna Alekseevna Magaeva, Boris Turk, Evgeniy Petrovich Naiden, Georgy Andreevich Mikhaylon, Mojca Urška Mikac, Olga Georgievna Terekhova, Olga Vasiljeva, Sergey Grigorievich Psakhie, Volya Isaevich Itin

Óxidos ferrimagnéticos com nanopartículas de estrutura espinélica e nanopartículas de óxido de ferro, sistemas coloidais aquosos biocompatíveis compreendendo nanopartículas, ferrilipossomas e usos dos mesmos

https://worldwide.espacenet.com/patent/search/family/047629828/publication/BR112014002755A2?q=pn%3DBR112014002755A2

Extended patent application

EA029170B1

3. 8. 2012

Institute of Strength Physics and Materials Science, Siberian Branch of the Russian Academy of Sciences [RU], Jožef Stefan Institute [SI]

Volya Isaevich Itin, Anna Alekseevna Magaeva, Mojca Urška Mikac, Georgy Andreevich Mikhaylov, Evgeniy Petrovich Naiden, Sergey Grigorievich Psakhie, Olga Georgievna Terekhova, Boris Turk, Olga Vasiljeva

Oxide Ferrimagnetics with Spinel Structure Nanoparticles and Iron Oxide Nanoparticles, Biocompatible Aqueous Colloidal Systems Comprising Nanoparticles, Ferriliposomes, and Uses Thereof

https://worldwide.espacenet.com/patent/search/family/047629828/publication/EA029170B1?q=pn%3DEA201400193A1

Extended patent application

EP2739291A2

3. 8. 2012

Jožef Stefan Institute [SI]

Volya Isaevich Itin, Anna Alekseevna Magaeva, Mojca Urška Mikac, Georgy Andreevich Mikhaylov, Evgeniy Petrovich Naiden, Sergey Grigorievich Psakhie, Olga Georgievna Terekhova, Boris Turk, Olga Vasiljeva

Oxide Ferrimagnetics with Spinel Structure Nanoparticles and Iron Oxide Nanoparticles, Biocompatible Aqueous Colloidal Systems Comprising Nanoparticles, Ferriliposomes, and Uses Thereof

https://worldwide.espacenet.com/patent/search/family/047629828/publication/EP2739291A2?q=pn%3DEP2739291A2

Extended patent application

US2014186268A1

4. 2. 2014

Institute of Strength Physics and Materials Science, Siberian Branch of the Russian Academy of Sciences [RU], Jožef Stefan Institute [SI]

Volya Isaevich Itin, Anna Alekseevna Magaeva, Mojca Urška Mikac, Georgy Andreevich Mikhaylov, Evgeniy Petrovich Naiden, Sergey Grigorievich Psakhie, Olga Georgievna Terekhova, Boris Turk, Olga Vasiljeva

Oxide Ferrimagnetics with Spinel Structure Nanoparticles and Iron Oxide Nanoparticles, Biocompatible Aqueous Colloidal Systems Comprising Nanoparticles, Ferriliposomes, and Uses Thereof

https://worldwide.espacenet.com/patent/search/family/047629828/publication/US2014186268A1?q=pn%3DUS2014186268A1

Coverslip Processor for Staining of Specimens on Coverslips and Method for Staining of Specimens on Coverslips

SI24086A

15. 5. 2012

Borut Jerman [SI]

Borut Jerman

Nosilec krovnih stekelc za barvanje vzorcev na krovnih stekelcih in metoda za barvanje vzorcev na krovnih stekelcih [SL], Coverslip Processor for Staining of Specimens on Coverslips and Method for Staining of Specimens on Coverslips [EN]

The present invention relates to a coverslip processor for staining of specimens on coverslips wherein the processor comprising a rack (1), and a top slider (2) and a base seal (3) for closing the rack (1), wherein the rack (1) is partitioned with a number of compartments (6), each compartment (6) being large enough to accommodate a coverslip; as well as to a method for staining of specimens on a coverslip using that coverslip processor.

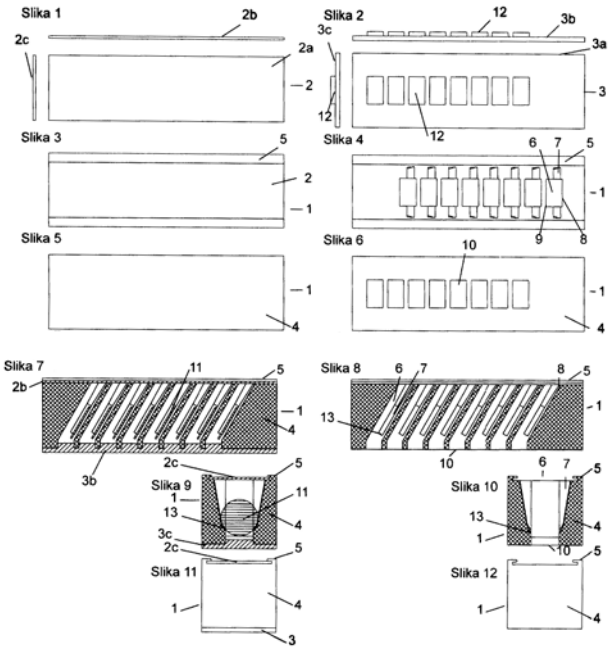

Biological sciences

Electronics, IT and telecoms, Physical and exact sciences

Other electronics related, Industrial products, Other

https://worldwide.espacenet.com/patent/search/family/049029156/publication/SI24086A?q=si24086

UIL RS

Extended patent application

WO2013172796A3

15. 5. 2013

Borut Jerman [SI]

Borut Jerman

Coverslip Processor for Staining of Specimens on Coverslips and Method for Staining of Specimens on Coverslips

https://worldwide.espacenet.com/patent/search/family/049029156/publication/WO2013172796A3?q=si24086

Activatable Antibodies That Bind Epidermal Growth Factor Receptor and Methods of Use Thereof

WO2013163631A3

27. 4. 2012

CytomX Therapeutics Inc. [US]

Luc Roland Desnoyers, Shouchun Liu, Henry Bernard Lowman, Mary Elizabeth-Edna Menendez, Jason Gary Sagert, Olga Vasiljeva, James William West

Activatable Antibodies That Bind Epidermal Growth Factor Receptor and Methods of Use Thereof

The invention relates generally to activatable antibodies that include a masking moiety (MM), a cleavable moiety (CM), and an antibody (AB) that specifically binds to epidermal growth factor receptor (EGFR), and to methods of making and using these anti- EGFR activatable antibodies in a variety of therapeutic, diagnostic and prophylactic indications.

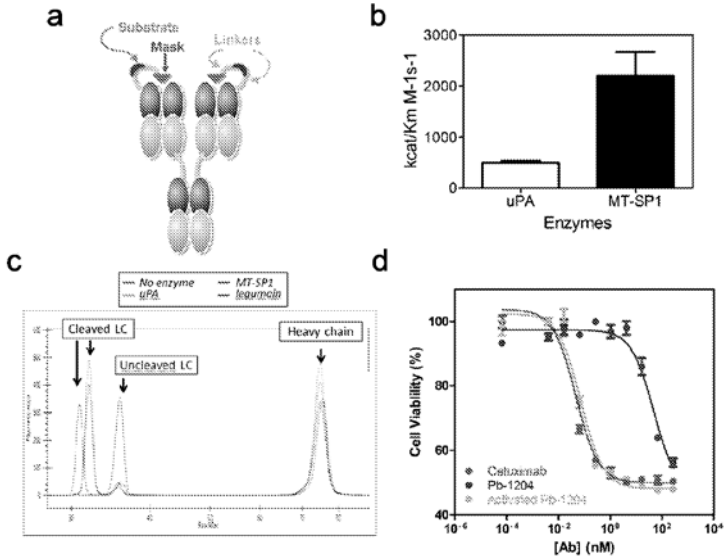

Biological Sciences

Biological sciences

Medical / health related

https://worldwide.espacenet.com/patent/search/family/049484042/publication/WO2013163631A3?q=WO2013163631A3

WIPO

Extended patent application

AU2013251310B2

26. 4. 2013

CytomX Therapeutics Inc. [US]

Luc Roland Desnoyers, Shouchun Liu, Henry Bernard Lowman, Mary Elizabeth-Edna Menendez, Jason Gary Sagert, Olga Vasiljeva, James William West

Activatable Antibodies That Bind Epidermal Growth Factor Receptor and Methods of Use Thereof

https://worldwide.espacenet.com/patent/search/family/049484042/publication/AU2013251310B2?q=AU2013251310B2

Extended patent application

BR112014026354A2

26. 4. 2013

CytomX Therapeutics Inc. [US]

Luc Roland Desnoyers, Shouchun Liu, Henry Bernard Lowman, Mary Elizabeth-Edna Menendez, Jason Gary Sagert, Olga Vasiljeva, James William West

Anticorpos ativáveis que ligam o receptor de fator de crescimento epidermal e métodos de uso do mesmo

https://worldwide.espacenet.com/patent/search/family/049484042/publication/BR112014026354A2?q=pn%3DBR112014026354A2

Extended patent application

CA2871458A1

26. 4. 2013

CytomX Therapeutics Inc. [US]

Luc Roland Desnoyers, Shouchun Liu, Henry Bernard Lowman, Mary Elizabeth-Edna Menendez, Jason Gary Sagert, Olga Vasiljeva, James William West

Activatable Antibodies That Bind Epidermal Growth Factor Receptor and Methods of Use Thereof

https://worldwide.espacenet.com/patent/search/family/049484042/publication/CA2871458A1?q=pn%3DCA2871458A1

Extended patent application

CN104540518A

26. 4. 2013

CytomX Therapeutics Inc. [US]

Luc Roland Desnoyers, Shouchun Liu, Henry Bernard Lowman, Mary Elizabeth-Edna Menendez, Jason Gary Sagert, Olga Vasiljeva, James William West

Activatable Antibodies That Bind Epidermal Growth Factor Receptor and Methods of Use Thereof

https://worldwide.espacenet.com/patent/search/family/049484042/publication/CN104540518A?q=pn%3DCN104540518A

Extended patent application

CO7160045A2

27. 10. 2014

CytomX Therapeutics Inc. [US]

Luc Roland Desnoyers, Shouchun Liu, Henry Bernard Lowman, Mary Elizabeth-Edna Menendez, Jason Gary Sagert, Olga Vasiljeva, James William West

Anticuerpos activable que se unen al receptor del factor de crecimiento epidérmico y métodos de uso de los mismos

https://worldwide.espacenet.com/patent/search/family/049484042/publication/CO7160045A2?q=pn%3DCO7160045A2

Extended patent application

EP2841093A4

26. 4. 2013

CytomX Therapeutics Inc. [US]

Luc Roland Desnoyers, Shouchun Liu, Henry Bernard Lowman, Mary Elizabeth-Edna Menendez, Jason Gary Sagert, Olga Vasiljeva, James William West

Activatable Antibodies That Bind Epidermal Growth Factor Receptor and Methods of Use Thereof

https://worldwide.espacenet.com/patent/search/family/049484042/publication/EP2841093A4?q=EP2841093A4

Extended patent application

HK1204581A1

3. 6. 2015

CytomX Therapeutics Inc. [US]

Luc Roland Desnoyers, Shouchun Liu, Henry Bernard Lowman, Mary Elizabeth-Edna Menendez, Jason Gary Sagert, Olga Vasiljeva, James William West

Activatable Antibodies That Bind Epidermal Growth Factor Receptor and Methods of Use Thereof

https://worldwide.espacenet.com/patent/search/family/049484042/publication/HK1204581A1?q=pn%3DHK1204581A1

Extended patent application

IN2164MUN2014A

28. 10. 2014

CytomX Therapeutics Inc. [US]

Luc Roland Desnoyers, Shouchun Liu, Henry Bernard Lowman, Mary Elizabeth-Edna Menendez, Jason Gary Sagert, Olga Vasiljeva, James William West

Activatable Antibodies That Bind Epidermal Growth Factor Receptor and Methods of Use Thereof

https://worldwide.espacenet.com/patent/search/family/049484042/publication/IN2164MUN2014A?q=pn%3DIN2164MUN2014A

Extended patent application

JP2019108331A

1. 2. 2019

CytomX Therapeutics Inc. [US]

Luc Roland Desnoyers, Shouchun Liu, Henry Bernard Lowman, Mary Elizabeth-Edna Menendez, Jason Gary Sagert, Olga Vasiljeva, James William West

Activatable Antibodies That Bind Epidermal Growth Factor Receptor and Methods of Use Thereof

https://worldwide.espacenet.com/patent/search/family/049484042/publication/JP2019108331A?q=pn%3DJP2015516813A

Extended patent application

KR20150035538A

26. 4. 2013

CytomX Therapeutics Inc. [US]

Luc Roland Desnoyers, Shouchun Liu, Henry Bernard Lowman, Mary Elizabeth-Edna Menendez, Jason Gary Sagert, Olga Vasiljeva, James William West

Activatable Antibodies That Bind Epidermal Growth Factor Receptor and Methods of Use Thereof

https://worldwide.espacenet.com/patent/search/family/049484042/publication/KR20150035538A?q=pn%3DKR20150035538A

Extended patent application

MX2014013041A

26. 4. 2013

CytomX Therapeutics Inc. [US]

Luc Roland Desnoyers, Shouchun Liu, Henry Bernard Lowman, Mary Elizabeth-Edna Menendez, Jason Gary Sagert, Olga Vasiljeva, James William West

Activatable Antibodies That Bind Epidermal Growth Factor Receptor and Methods of Use Thereof

https://worldwide.espacenet.com/patent/search/family/049484042/publication/MX2014013041A?q=pn%3DMX2014013041A

Extended patent application

PE20150605A1

26. 4. 2013

CytomX Therapeutics Inc. [US]

Luc Roland Desnoyers, Shouchun Liu, Henry Bernard Lowman, Mary Elizabeth-Edna Menendez, Jason Gary Sagert, Olga Vasiljeva, James William West

Activatable Antibodies That Bind Epidermal Growth Factor Receptor and Methods of Use Thereof

https://worldwide.espacenet.com/patent/search/family/049484042/publication/PE20150605A1?q=pn%3DPE20150605A1

Extended patent application

PE20150605A1

26. 4. 2013

CytomX Therapeutics Inc. [US]

Luc Roland Desnoyers, Shouchun Liu, Henry Bernard Lowman, Mary Elizabeth-Edna Menendez, Jason Gary Sagert, Olga Vasiljeva, James William West

Anticuerpos activables que se unen al receptor del factor de crecimiento epidermico

https://worldwide.espacenet.com/patent/search/family/049484042/publication/PE20150605A1?q=pn%3DPE20150605A1

Extended patent application

PH12014502641A1

26. 11. 2014

CytomX Therapeutics Inc. [US]

Luc Roland Desnoyers, Shouchun Liu, Henry Bernard Lowman, Mary Elizabeth-Edna Menendez, Jason Gary Sagert, Olga Vasiljeva, James William West

Activatable Antibodies That Bind Epidermal Growth Factor Receptor and Methods of Use Thereof

https://worldwide.espacenet.com/patent/search/family/049484042/publication/PH12014502641A1?q=pn%3DPH12014502641A1

Extended patent application

RU2713121C2

26. 4. 2013

CytomX Therapeutics Inc. [US]

Luc Roland Desnoyers, Shouchun Liu, Henry Bernard Lowman, Mary Elizabeth-Edna Menendez, Jason Gary Sagert, Olga Vasiljeva, James William West

Activatable Antibodies That Bind Epidermal Growth Factor Receptor and Methods of Use Thereof

https://worldwide.espacenet.com/patent/search/family/049484042/publication/RU2713121C2?q=pn%3DRU2014147684A

Extended patent application

SG11201406943XA

26. 4. 2013

CytomX Therapeutics Inc. [US]

Luc Roland Desnoyers, Shouchun Liu, Henry Bernard Lowman, Mary Elizabeth-Edna Menendez, Jason Gary Sagert, Olga Vasiljeva, James William West

Activatable Antibodies That Bind Epidermal Growth Factor Receptor and Methods of Use Thereof

https://worldwide.espacenet.com/patent/search/family/049484042/publication/SG11201406943XA?q=pn%3DSG11201406943XA

Extended patent application

US9120853B2

26. 4. 2013

CytomX Therapeutics Inc. [US]

Luc Roland Desnoyers, Shouchun Liu, Henry Bernard Lowman, Mary Elizabeth-Edna Menendez, Jason Gary Sagert, Olga Vasiljeva, James William West

Activatable Antibodies That Bind Epidermal Growth Factor Receptor and Methods of Use Thereof

https://worldwide.espacenet.com/patent/search/family/049484042/publication/US9120853B2?q=US9120853B2

Extended patent application

ZA201407715B

23. 10. 2014

CytomX Therapeutics Inc. [US]

Luc Roland Desnoyers, Shouchun Liu, Henry Bernard Lowman, Mary Elizabeth-Edna Menendez, Jason Gary Sagert, Olga Vasiljeva, James William West

Activatable Antibodies That Bind Epidermal Growth Factor Receptor and Methods of Use Thereof

https://worldwide.espacenet.com/patent/search/family/049484042/publication/ZA201407715B?q=pn%3DZA201407715B

2011

Complex Antioxidant Extract from the Bark of Fir Tree with Cyclodextrins

SI23862B

12. 9. 2011

Ars Pharmae d. o. o. [SI]

Željko Cerovečki, Damjan Janeš, Nina Kočevar-Glavač, Borut Štrukelj, Eva Tavčar, Viktor Grilc, Samo Kreft, Ivan Mirt, Marko Slokar, Ante Zaloker

Kompleks antioksidativnega izvlečka iz skorje jelke s ciklodekstrini [SL], Complex Antioxidant Extract from the Bark of Fir Tree with Cyclodextrins [EN]

The invention relates to the cyclodextrin complex of antioxidant extract from white fir bark, with a high content of natural phenolic active ingredients, obtained by a special process of single-stage aqueous extraction of dried and finely ground fir bark, which can be followed by additional refining of polyphenols in second-stage liquid-liquid extraction. extraction solvent. The solvent is evaporated off from the obtained extract and the dried extract is granulated by the addition of cyclodextrins. The most commonly used is beta-cyclodextrin, which with its structure and physical properties protects active pharmacoform antioxidant groups on the active ingredients of the extract. The described technological process solves some technical and technological problems of stability of antioxidant extract from fir bark and eliminates the disadvantages of some processes of extraction of natural antioxidants from coniferous bark (e.g. Pycnogenol), as it does not use harmful substances in the process. The fir bark extract thus obtained is a new natural antioxidant that can be used as a stand-alone dietary supplement to supplement the required amount of antioxidants in the daily diet or as an addition to various beverages and other food products. It can also serve as an additive to improve the properties of food (protection of food from oxidation), as a supplement in veterinary and animal husbandry, as well as a basis for the preparation of medicines.

Slika 1

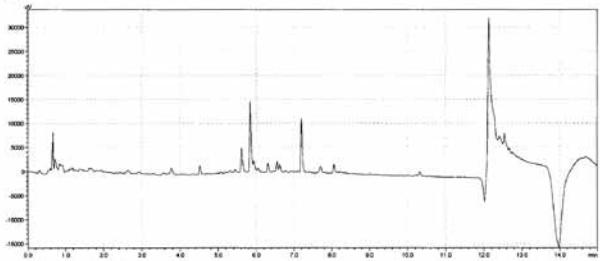

Slika 2

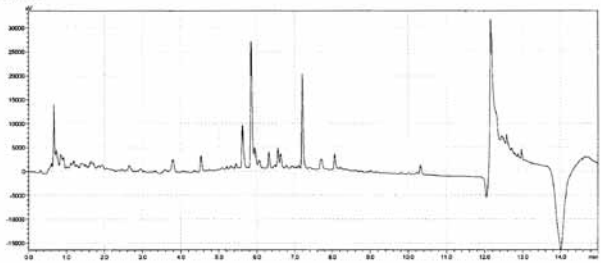

Slika 3

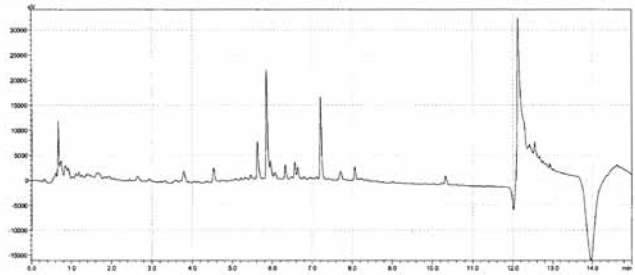

Biological Sciences

Biological sciences, Agriculture and marine resources, Agrofood industry

Medical / health related, Consumer related, Industrial products

https://worldwide.espacenet.com/patent/search/family/047915761/publication/SI23862B?q=SI23862B

UIL RS

A Complex Mixture of Natural Fibers with Added Selenium and Magnesium for the Maintenance of Body Weight, Organism Metabolism and Activation of the Immune System

SI23925A

9. 11. 2011

Ivan Bednjički [SI]

Ivan Bednjički, Mia Gostinčar, Borut Štrukelj

Kompleksna zmes naravnih vlaknin z dodatkom selena in magnezija za vzdrževanje telesne teže, metabolizma organizma in aktivacije imunskega sistema [SL], A Complex Mixture of Natural Fibers with Added Selenium and Magnesium for the Maintenance of Body Weight, Organism Metabolism and Activation of the Immune System [EN]

The invention relates to a unique composition containing polysaccharides and elements with glucomamam, beta glucans, iodine, magnesium and selenium, which synergistically allow in physiological conditions and in the prescribed daily dose to maintain or reduce body weight, speed up digestion, increase caloric metabolism and improve the appearance of skin, nails and hair.

/

Biological Sciences

Biological sciences

Medical / health related, Consumer related, Industrial products

https://worldwide.espacenet.com/patent/search/family/048578711/publication/SI23925A?q=si23925

UIL RS

Refined Liquid Antioxidant Extract from the Bark of Fir Tree and Process for Its Production

SI23867B

31. 8. 2011

Ars Pharmae d. o. o. [SI]

Damjan Janeš, Nina Kočevar-Glavač, Borut Štrukelj, Eva Tavčar, Samo Kreft, Marko Slokar, Ante Zaloker

Refined Liquid Antioxidant Extract from the Bark of Fir Tree and Process for Its Production

The invention relates to a liquid refined antioxidant extract from fir bark obtained by a special two-stage extraction process. The first extraction step is solid-liquid extraction using hot water as the extraction solvent. The second extraction step is liquid-liquid countercurrent extraction, where a mixture of oligophenols, polyphenols and terpenoids is extracted from the aqueous extract with an organic solvent. The organic extraction is followed by the addition of a non-volatile solvent or mixture of non-volatile solvents and evaporation of the organic extraction solvent. The final product is obtained by evaporation of the organic extraction solvent, so that a mixture of extracted oligophenols, polyphenols and terpenoids remains in the liquid solvent - non-volatile solvent, or in a mixture of non-volatile solvents. The described technological process solves technical and technological problems of industrial production of antioxidant extract from fir bark according to the patent process “Antioxidant extract from fir bark and spruce” (patent number: SI 22882 (A)) and eliminates the disadvantages of some processes of extraction of natural antioxidants from coniferous bark (Pycnogenol), as it does not use harmful substances (eg chloroform) in the process. The fir bark extract thus obtained is a new potent natural antioxidant that can be used as a dietary supplement to supplement the required amount of antioxidants in the daily diet, as well as a remedy for pathophysiological conditions directly or indirectly related to polyphenol deficiency or action. cosmetics.

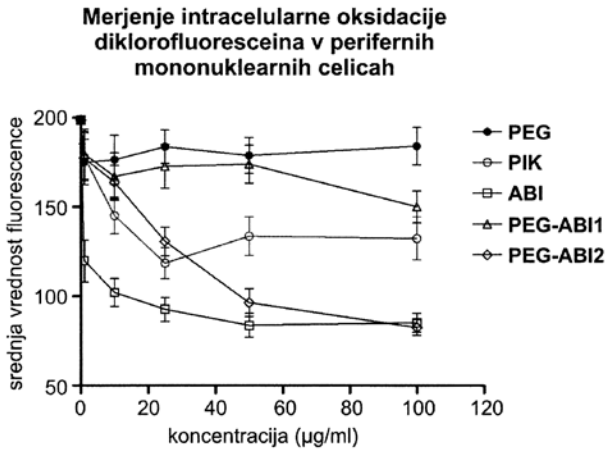

Biological Sciences

Biological sciences, Agrofood industry

Medical / health related, Consumer related, Industrial products

https://worldwide.espacenet.com/patent/search/family/047915766/publication/SI23867B?q=SI23867B

UIL RS

Use of Macrocipines as Pesticidal Agents

SI23835A

10. 8. 2011

Jožef Stefan Institute [SI], National Institute Of Biology [SI]

Ida Istinič, Jana Žel, Jerica Sabotič, Jože Brzin, Kristina Gruden, Meti Buh Gašparič

Uporaba makrocipinov kot pesticidnih učinkovin [SL], Use of Macrocipines as Pesticidal Agents [EN]

The subject of the invention is the use of macrocypins as pesticidal active ingredients for plant protection. Macrocipins are a group of proteins

that are naturally present in the fungus Macrolepiota procera. The use of these plant protection proteins is possible in two ways. The first is by using genetically modified plants to which a polynucleotide sequence encoding at least one of the proteins of the present invention is stably incorporated into the genome. Another way is the direct application of proteins to plants. In this case, a polynucleotide sequence encoding at least one of the proteins of the present invention is inserted into a heterologous expression vector for the production of a recombinant protein in a bioreactor. These proteins can be applied directly to the plants we want to protect after the cleaning process. The polypeptides of the present invention are particularly useful for protecting against pests of agricultural plants, such as groups of insects of the orders Lepidoptera, Hemiptera, Diptera and Coleoptera, preferably against the Colorado potato beetle (Leptinotarsa decemlineata).

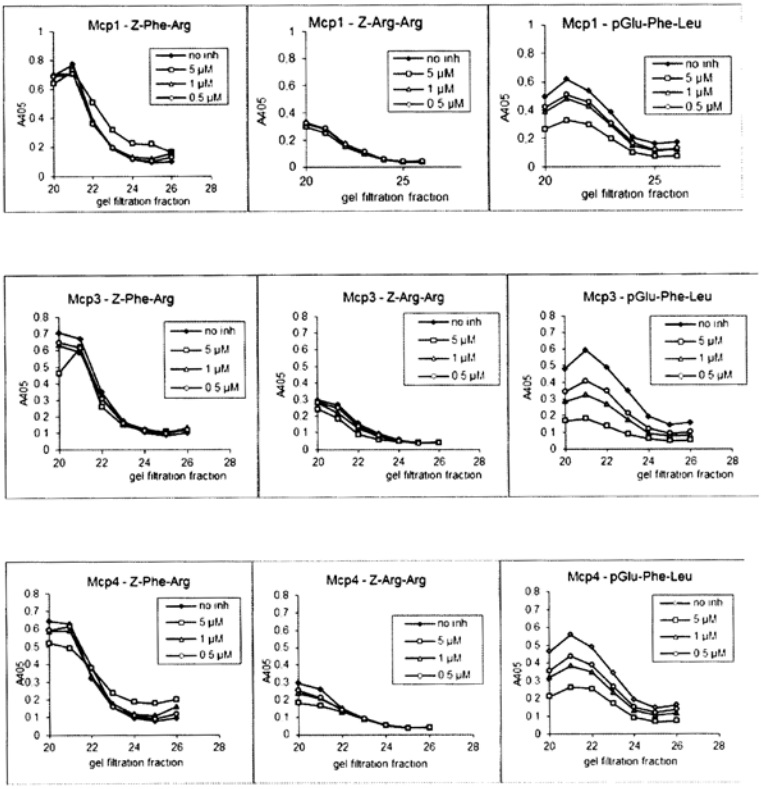

Biological Sciences

Agriculture and marine resources

Industrial products, Other

https://worldwide.espacenet.com/patent/search/family/046650535/publication/SI23835A?q=si23835

UIL RS

Extended patent application

WO2013020958A1

6. 8. 2012

Jože Brzin [SI], Meti Buh Gašparič [SI], Kristina Gruden [SI], Jožef Stefan Institute [SI], Ida Istinič [SI], National Institute of Biology [SI], Jerica Sabotič [SI], Jana Žel [SI]

Jože Brzin, Buh Meti Gašparič, Kristina Gruden, Ida Istinič, Jerica Sabotič, Jana Žel

Use of Macrocipines as Pesticidal Agents

https://worldwide.espacenet.com/patent/search/family/046650535/publication/WO2013020958A1?q=%20WO2013020958A1

Contrast Agent for T_1 and/or T_2 Magnetic Resonant Scanning and Method for Preparing It

RU2471502C1

4. 8. 2011

Tomsk Scientific Center, Siberian Branch of the Russian Academy of Sciences [RU], Jožef Stefan Institute [SI]

Volya Isaevich Itin, Anna Alekseevna Magaeva, Mojca Urška Mikac, Georgy Andreevich Mikhaylov, Evgeniy Petrovich Naiden, Sergey Grigorievich Psakhie, Olga Georgievna Terekhova, Boris Turk, Olga Vasiljeva

Contrast Agent for T_1 and / or T_2 Magnetic Resonant Scanning and Method for Preparing It

The invention refers to the chemical-pharmaceutical industry and medicine and represents a contrast agent for T and/or T magnetic resonant scanning consisting of a nano-sized superparamagnetic powder of cubic cobalt ferrite spinel CoFeO, wherein 0.1 ≤ x ≤ 0.99 of particle size 3÷20 nm. EFFECT: invention provides preparing the contrast agent having a simultaneous effect on relative positive T and negative T contrasts in magnetic resonant scanning.4 cl, 3 tbl, 7 dwg

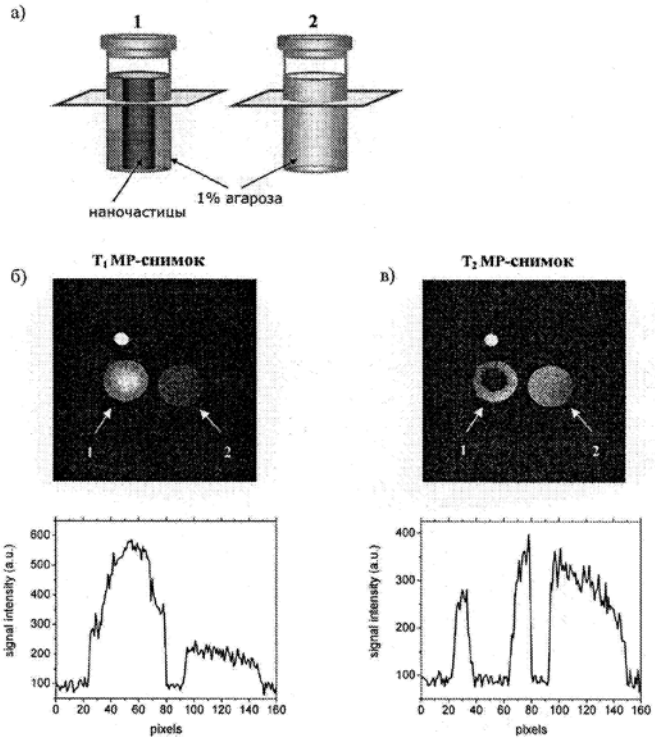

Схема образцов из 1% агарозы, один из которых содержит локально добавленные наночастицы магнитной кобальтовой шпинели (а) и их магнитно-резонансные (МР) поперечные снимки: б) T_1 МР-снимок при времени эхо T_e = 8.5 мс и времени релаксации T_p = 400 мс; в) T_2 МР-снимок при T_e = 60 мс и T_p = 2000 мс, с соответствующими им графическими профилями МР сигнала

Biological Sciences

Biological sciences, Measurements and standards

Medical / health related

https://worldwide.espacenet.com/patent/search/family/048805934/publication/RU2471502C1?q=ru2471502

RU

Cathepsin-Binding Compounds Bound to a Nanodevice and Their Diagnostic and Therapeutic Use

EP2537532A1

22. 6. 2011

Jožef Stefan Institute [SI], Norbert Schaschke [DE]

Georgy Mikhaylov, Norbert Schaschke, Boris Turk, Olga Vasiljeva

Cathepsin-Binding Compounds Bound to a Nanodevice and Their Diagnostic and Therapeutic Use

The invention relates to Cathepsin-binding compounds bound to a nanodevice comprising a therapeutic and/or diagnostic moiety, for use in the diagnosis and/or treatment of inflammatory diseases, and/or for use in the diagnosis and/or treatment of neoplastic diseases, wherein the Cathepsin-binding compound binds to inflammatory cells of the tumour stroma. The invention also relates to Cathepsin B-targeting compounds and Cathepsin B-binding and liposome-binding compounds.

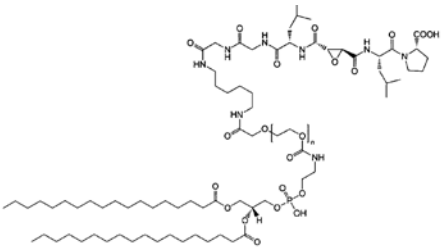

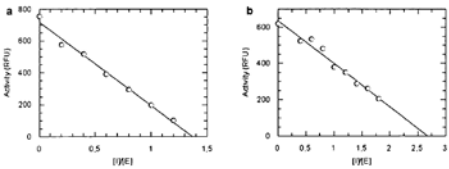

Biological Sciences

Biological sciences

Medical / health related, Genetic engineering / molecular biology

https://worldwide.espacenet.com/patent/search/family/044741144/publication/EP2537532A1?q=%20EP11005110A

EPO

Extended patent application

EP2723387B1

22. 6. 2012

Norbert Schaschke [DE], Jožef Stefan Institute [SI]

Georgy Mikhaylov, Norbert Schaschke, Boris Turk, Olga Vasiljeva

Cathepsin-Binding Compounds Bound to a Carrier and Their Diagnostic Use

https://worldwide.espacenet.com/patent/search/family/044741144/publication/EP2723387B1?q=EP2723387B1

Extended patent application

BR112013032766A2

22. 6. 2012

Jožef Stefan Institute [SI], Norbert Schaschke [DE]

Georgy Mikhaylov, Norbert Schaschke, Boris Turk, Olga Vasiljeva

Compostos de ligação com catepsina, composto que visa catepsina, processo para a preparação dos referidos compostos e usos dos mesmos na preparação de medicamentos

https://worldwide.espacenet.com/patent/search/family/044741144/publication/BR112013032766A2?q=pn%3DBR112013032766A2

Extended patent application

WO2012175223A1

22. 6. 2012

Georgy Mikhaylov [KZ], Norbert Schaschke [DE], Jožef Stefan Institute [SI], Boris Turk [SI], Olga Vasiljeva [SI]

Georgy Mikhaylov, Norbert Schaschke, Boris Turk, Olga Vasiljeva

Cathepsin-Binding Compounds Bound to a Carrier and Their Diagnostic Use

https://worldwide.espacenet.com/patent/search/family/044741144/publication/WO2012175223A1?q=pn%3DWO2012175223A1

Extended patent application

US2014227175A1

22. 6. 2012

Georgy Mikhaylov [KZ], Norbert Schaschke [DE], Jožef Stefan Institute [SI], Boris Turk [SI], Olga Vasiljeva [SI]

Georgy Mikhaylov, Norbert Schaschke, Boris Turk, Olga Vasiljeva

Cathepsin-Binding Compounds Bound to a Carrier and Their Diagnostic Use

https://worldwide.espacenet.com/patent/search/family/044741144/publication/US10668175B2?q=US10668175B2

Modified Food Grade Microorganism for Treatment of Inflammatory Bowel Disease

EP2521737B1

5. 1. 2011

Jožef Stefan Institute [SI], Labena d. o. o. [SI], University of Ljubljana [SI]

Aleš Berlec, Boris Čeh, Mojca Lunder, Matjaž Ravnikar, Borut Štrukelj

Genetically Modified Food Grade Microorganism for Treatment of Inflammatory Bowel Disease

The present invention relates to genetically modified microorganisms that express TNF± binding polypeptide on their surface. Peptides expressed on the surface of microorganism are more resistant to chemical and enzymatic degradation in the gastrointestinal tract. Such microorganisms are capable of binding TNF± and therefore reducing the content of free TNF± and alleviating its pro-inflammatory effects in the gut. Such microorganisms can be used as medicament in the treatment of inflammatory bowel disease.

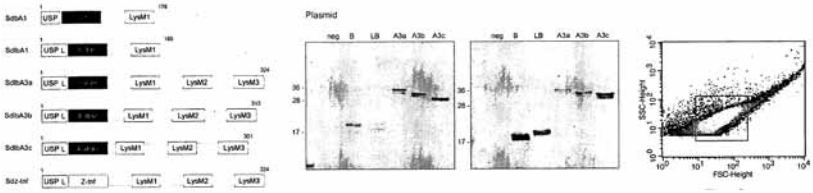

Biological Sciences

Biological sciences

Medical / health related, Genetic engineereing / molecluar biology

https://worldwide.espacenet.com/patent/search/family/041786343/publication/EP2521737B1?q=%20EP2521737B1

EPO

Extended patent application

WO2011083080A1

5. 1. 2011

Jožef Stefan Institute [SI], Labena d. o. o. [SI], University of Ljubljana [SI], Aleš Berlec [SI], Boris Čeh [SI], Mojca Lunder [SI], Matjaž Ravnikar [SI], Borut Štrukelj [SI]

Aleš Berlec, Boris Čeh, Mojca Lunder, Matjaž Ravnikar, Borut Štrukelj

Modified Food Grade Microorganism for Treatment of Inflammatory Bowel Disease

https://worldwide.espacenet.com/patent/search/family/041786343/publication/WO2011083080A1?q=pn%3DWO2011083080A1

Extended patent application

US8754198B2

5. 1. 2011

Jožef Stefan Institute [SI], Labena d. o. o. [SI], University of Ljubljana [SI], Aleš Berlec [SI], Boris Čeh [SI], Mojca Lunder [SI], Matjaž Ravnikar [SI], Borut Štrukelj [SI]

Aleš Berlec, Boris Čeh, Mojca Lunder, Matjaž Ravnikar, Borut Štrukelj

Modified Food Grade Microorganism for Treatment of Inflammatory Bowel Disease

https://worldwide.espacenet.com/patent/search/family/041786343/publication/US8754198B2?q=%20US8754198B2

2010

A Process for the Preparation of Marbofloxacin and Intermediate Thereof

SI2501680T1

19. 11. 2010

Krka, tovarna zdravil d. d., Novo mesto [SI]

Jernej Iskra, Ivanka Kolenc, Anica Pečavar, Igor Plaper, Jože Pucelj, Miloš Ružič, Rok Zupet

Postopek za pripravo marbofloksacina in njegovih intermediatov [SL], A Process for the Preparation of Marbofloxacin and Intermediate Thereof [EN]

The present invention describes a novel process for the preparation of marbofloxacin and intermediate thereof comprising reaction of ammonium hydroxide of formula III, NR 1 R 2 R 3 R 4 wherein R 1 , R 2 , R 3 and R 4 are independently selected from the group of H, alkyl, alkylaryl, aryl and/or heteroaryl, with compound of formula II, wherein R is selected from H, alkyl, arylalkyl, alkali metal cation, , NH 4 cation, NR 1 R 2 R 3 R 4 cation; X is halogen, such as chloro, bromo, fluoro, piperazinyl, which may be substituted or unsubstituted, and R' is selected from H, formyl or COOAlkyl.

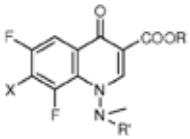

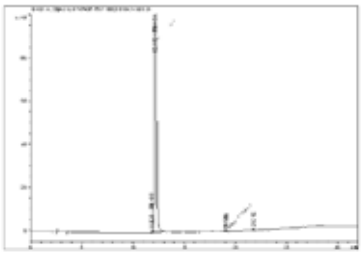

Biological Sciences

Physical and exact sciences, Industrial manufacturing, material and transport

Industrial products, Other

https://worldwide.espacenet.com/patent/search/family/043480997/publication/SI2501680T1?q=si2501680

UIL RS

Extended patent application

CN102712598A

19. 11. 2010

Krka, tovarna zdravil, d. d., Novo mesto [SI]

Jernej Iskra, Ivanka Kolenc, Anica Pečavar, Igor Plaper, Jože Pucelj, Miloš Ružič, Rok Zupet

A Process for the Preparation of Marbofloxacin and Intermediate Thereof

https://worldwide.espacenet.com/patent/search/family/043480997/publication/CN102712598A?q=pn%3DCN102712598A

Extended patent application

EA201290361A1

19. 11. 2010

Krka, tovarna zdravil, d. d., Novo mesto [SI]

Jernej Iskra, Ivanka Kolenc, Anica Pečavar, Igor Plaper, Jože Pucelj, Miloš Ružič, Rok Zupet

A Process for the Preparation of Marbofloxacin and Intermediate Thereof

https://worldwide.espacenet.com/patent/search/family/043480997/publication/EA201290361A1?q=pn%3DEA201290361A1

Extended patent application

EP2332916A2

17. 3. 2010

Krka, tovarna zdravil, d. d., Novo mesto [SI]

Jernej Iskra, Ivanka Kolenc, Anica Pečavar, Igor Plaper, Jože Pucelj, Miloš Ružič, Rok Zupet

A Process for the Preparation of Marbofloxacin and Intermediate Thereof

https://worldwide.espacenet.com/patent/search/family/043480997/publication/EP2332916A2?q=pn%3DEP2332916A2

Extended patent application

WO2011061292A1

19. 11. 2010

Krka, tovarna zdravil, d. d., Novo mesto [SI], Jernej Iskra [SI], Ivanka Kolenc [SI], Anica Pečavar [SI], Igor Plaper [SI], Jože Pucelj [SI], Miloš Ružič [SI], Rok Zupet [SI]

Jernej Iskra, Ivanka Kolenc, Anica Pečavar, Igor Plaper, Jože Pucelj, Miloš Ružič, Rok Zupet

A Process for the Preparation of Marbofloxacin and Intermediate Thereof

https://worldwide.espacenet.com/patent/search/family/043480997/publication/WO2011061292A1?q=pn%3DWO2011061292A1

Use of Glycosidases and Glycosyltransferases for Increased Production of Proteins

SI23374A

24. 5. 2010

National Institute of Biology [SI]

Špela Baebler, David Dobnik, Dejan Štebih, Jana Žel, Kristina Gruden

Uporaba glikozidaz in glikoziltransferaz za povečano proizvodnjo proteinov [SL], Use of Glycosidases and Glycosyltransferases for Increased Production of Proteins [EN]

The invention relates to a method for the improved production of recombinant proteins in plants or plant cells solving the problem of the production of complex proteins in a quick, reliable and economically effective way. Preferable plants for this are N. tabacum, into which at least one polynucleotide is introduced, which is coding a desired protein for the production and at least one coding modulator sequence which increases permeability between cells in target cells, preferably from the group of glycosidases, or into which at least one polynucleotide is introduced, containing both the sequence for the desired protein and also the coding sequence for the increase of permeability between cells in target cells, preferably from the group of glycosidases. Polynucleotide sequences originate preferentially from plant viruses, preferably TMV and/or PVX.

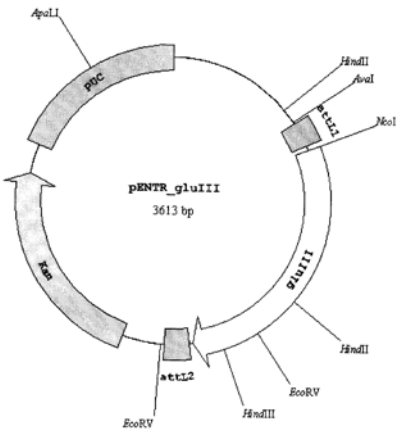

Biological Sciences

Biological sciences

Genetic engineering / molecular biology

https://worldwide.espacenet.com/patent/search/family/044546017/publication/SI23374A?q=si23374

UIL RS

Extended patent application

WO2011149429A1

18. 5. 2010

National Institute of Biology [SI], Špela Baebler [SI], David Dobnik [SI], Dejan Štebih [SI], Jana Žel [SI], Kristina Gruden [SI]

Špela Baebler, David Dobnik, Dejan Štebih, Jana Žel, Kristina Gruden

Use of Glycosidases and Glycosyltransferases for Enhanced Protein Production

https://worldwide.espacenet.com/patent/search/family/044546017/publication/WO2011149429A1?q=%20WO2011149429A1

5-Nitro-8-Hydroxyquinolines as Inhibitors of Cathepsin B

WO2011091973A1

28. 1. 2010

Stanislav Gobec [SI], Zala Jevnikar [SI], Janko Kos [SI], Bojana Mirković [SI], Nataša Obermajer [SI], Izidor Sosič [SI], Samo Turk [SI], Univeristy of Ljubljana [SI]

Stanislav Gobec, Zala Jevnikar, Janko Kos, Bojana Mirković, Nataša Obermajer, Izidor Sosič, Samo Turk

5-Nitro-8-Hydroxyquinolines as Inhibitors of Cathepsin B

This invention relates to the compounds or a pharmaceutical acceptable salts, hydrates or solvates thereof, which are inhibitors of cysteine proteases, in particular of cathepsin B. Compounds of the invention are useful in the treatment of diseases in which cathepsin B is implicated.

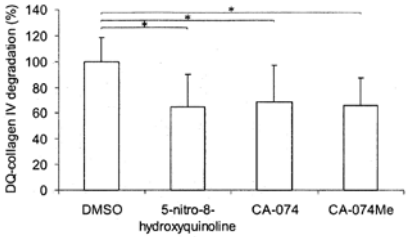

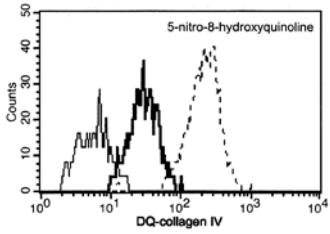

Biological Sciences

Biological science

Medical / health related

https://worldwide.espacenet.com/patent/search/family/042227786/publication/WO2011091973A1?q=%20WO2011091973A1%20

WIPO

Extended patent application

EP2353599A1

28. 1. 2010

University of Ljubljana

Bojana Mirković, Samo Turk

8-Hydroxyquinolines as Inhibitors of Cathepsin B

https://worldwide.espacenet.com/patent/search/family/042227786/publication/EP2353599A1?q=pn%3DEP2353599A1

2008

Inhibition of Activity of Cathepsin X for Treatment of Diseases Connected with Neurodegenerative Processes

SI22890A

13. 10. 2008

Bojan Doljak [SI], Zala Jevnikar [SI], Janko Kos [SI], Nataša Obermajer [SI], Urša Pečar Fonović [SI]

Bojan Doljak, Zala Jevnikar, Janko Kos, Nataša Obermajer, Urša Pečar Fonović

Inhibicija aktivnosti katepsina X za zdravljenje bolezni, povezanih z nevrodegenerativnimi procesi [SI], Inhibition of Activity of Cathepsin X for Treatment of Diseases Connected with Neurodegenerative Processes [EN]

During intensive studies leading to the submitted invention, the inventors here found out that the activity of cathepsin X is important for the survival of neurons and neuritogenesis and that inhibitors of this activity increase the survival of these cells and increase the neuritogenesis, because the splitting of the C- terminal part of alpha and gamma enolase, which represents the substrate for the enzymatic activity of cathepsin X, is prevented in this case.

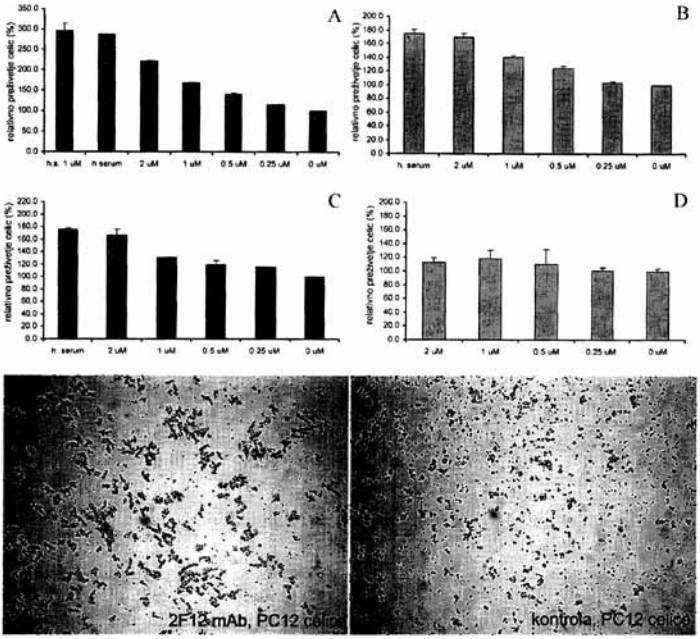

Biological Sciences

Biological sciences

Medical / health related, Genetic engineering / molecular biology

https://worldwide.espacenet.com/patent/search/family/042123115/publication/SI22890A?q=si22890

UIL RS

Peptide Uroaktivin as Activator of Enzyme Urokinase

SI22865A

25. 9. 2008

University of Ljubljana [SI]

Bojan Doljak, Janko Kos, Nataša Obermajer

Peptid uroaktivin kot aktivator encima urokinaze [SI], Peptide Uroaktivin as Activator of Enzyme Urokinase [EN]

During intensive studies leading to the submitted invention, the inventors here found out that the peptide uroaktivin with the amino acid sequence SEQ ID NO: 1 binds and increases the enzymatic activity of urokinase and tissue plasminogenic activator. Thus according to the first aspect, the submitted invention assures the amino acid sequence of the peptide uroaktivin - SEQ ID NO: 1. The submitted invention also assures the use of the peptide uroaktivin for a more successful treatment of diseases or states in which the application of thrombolytics is indicated - such states are particularly acute coronary thromboses (acute myocardial infarction), acute ischemic brain strokes, acute pulmonary thromboembolisms, deep venous thromboses and acute arterial thromboembolisms - and for assuring patency of arteriovenous canules and intravenous catheters.

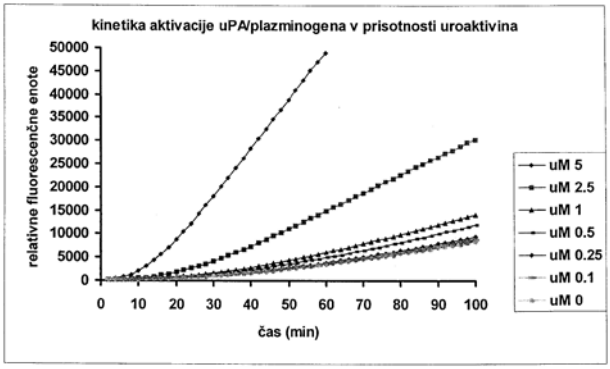

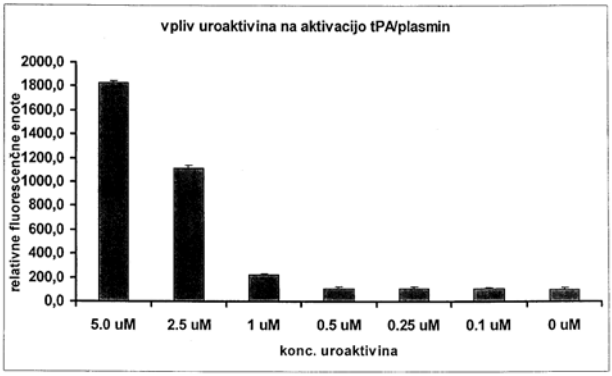

Biological Sciences

Biological sciences

Medical / health related, Genetic engineering / molecular biology

https://worldwide.espacenet.com/patent/search/family/041227264/publication/SI22865A?q=si22865

UIL RS

Extended patent application

WO2010034490A1

24. 9. 2009

Bojan Doljak [SI], Janko Kos [SI], Nataša Obermajer [SI], University of Ljubljana [SI]

Bojan Doljak, Janko Kos, Nataša Obermajer

Peptide Uroaktivin as an Activator of Enzyme Urokinase

https://worldwide.espacenet.com/patent/search/family/041227264/publication/WO2010034490A1?q=WO2010034490A1

Antioxidative Extract from Fir and Spruce Bark

SI22882A

2. 10. 2008

University of Ljubljana [SI]

Damjan Janeš, Samo Kreft, Borut Štrukelj, Andrej Umek

Antioksidativni izvleček iz skorje jelke in smreke [SL], Antioxidative Extract from Fir and Spruce Bark [EN]

The subject of the invention is a procedure of preparation and method of application of extracts from the fir and spruce bark, which are obtained according to a special extraction procedure, in which crushed bark is extracted with water first, then the water extract is extracted with ethyl-acetate and finally polyphenols are precipitated from ethylacetate under addition of pentane. The extract obtained contains between 30 and 96% of polyphenols and exhibits an antioxidant activity equivalent to 30 and 96% of the pyrogallol standard. The extract is used especially as a food supplement for achieving a required quantity of antioxidants in everyday food, as a medicament for pathophysiological states, indirectly or directly connected with the lack of polyphenols or their activity, and as an additive in nutrition and cosmetics.

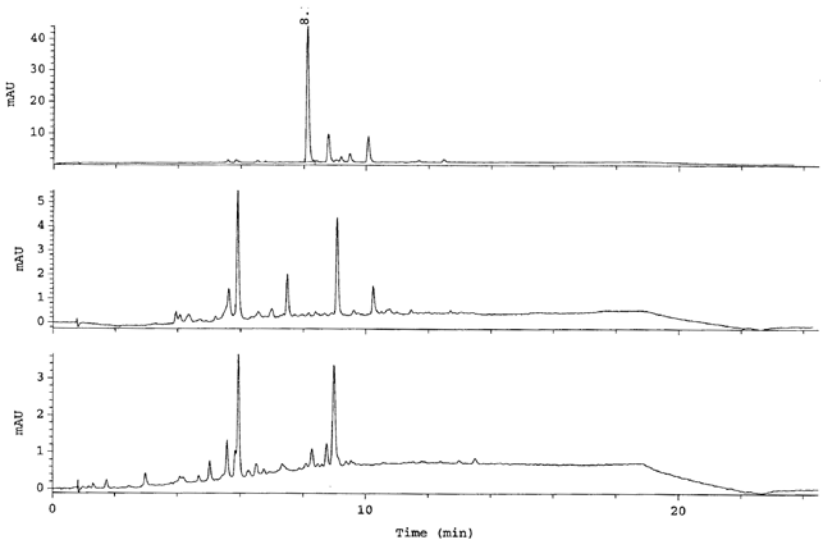

Biological Sciences

Biological sciences

Medical / health related

https://worldwide.espacenet.com/patent/search/family/042123110/publication/SI22882A?q=si22882

UIL RS

2007

Process for Preparing 2-Sulfinyl-1H-Benzimidazoles

EP2030973A1

31. 8. 2007

Krka, d. d. [SI]

Jernej Iskra, Berta Kotar Jordan, Miloš Ružič, Janez Smodiš, Stojan Stavber, Rok Zupet

Process for Preparing 2-Sulfinyl-1H-Benzimidazoles

The present invention relates to a process for preparing 2-{2-pyridinyl-methylsulfinyl}-1 H -benzimidazoles by oxidizing a thioether precursor in the presence of trifluoroethanol.

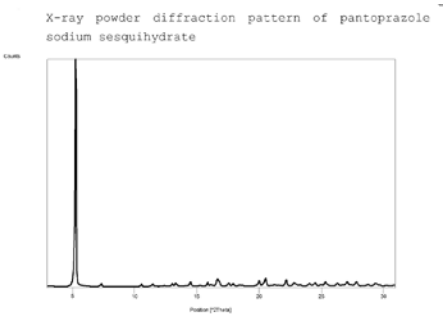

Biological Sciences

Industrial manufacturing, material and transport, Biological sciences

Medical / health related, Industrial products, Other

https://worldwide.espacenet.com/patent/search/family/039047827/publication/EP2030973A1?q=%20EP07115432A

EPO

Extended patent application

EA018796B1

29. 8. 2008

Krka, d. d. [SI]

Jernej Iskra, Berta Kotar Jordan, Miloš Ružič, Janez Smodiš, Stojan Stavber, Rok Zupet

Process for Preparing 2-(2-Pyridinylmethylsulfinyl)-1h-Benzimidazoles

https://worldwide.espacenet.com/patent/search/family/039047827/publication/EA018796B1?q=EA018796B1

Extended patent application

WO2009027533A1

29. 8. 2008

Iskra Jernej [SI], Berta Kotar Jordan [SI], Krka, d. d. [SI], Miloš Ružič [SI], Janez Smodiš [SI], Stojan Stavber [SI], Rok Zupet [SI]

Jernej Iskra, Berta Kotar Jordan, Miloš Ružič, Janez Smodiš, Stojan Stavber, Rok Zupet

Process for Preparing 2-Sulfinyl-1H-Benzimidazoles

https://worldwide.espacenet.com/patent/search/family/039047827/publication/WO2009027533A1?q=pn%3DWO2009027533A1

Extended patent application

UA105479C2

29. 8. 2008

Krka, tovarna zdravil d. d. [SI]

Jernej Iskra, Berta Kotar Jordan, Miloš Ružič, Janez Smodiš, Stojan Stavber, Rok Zupet

Process for Preparing 2-Sulfinyl-1H-Benzimidazoles

https://worldwide.espacenet.com/patent/search/family/039047827/publication/UA105479C2?q=pn%3DUA105479C2

Selective Modulators of Alpha5beta1 Integrine Receptors and Triple Modulators of Alphavbeta3, Alphavbeta5 and Alpha5beta1 Integrine Receptors with 1,3,5-Tri

SI22675A

12. 11. 2007

University of Ljubljana, Faculty of Pharmacy [SI]

Kristina Nadrah, Slavko Pečar, Marija Sollner Dolenc

Selektivni modulatorji integrinskih receptorjev alfa5beta1 in trojni modulatorji integrinskih receptorjev alfaVbeta3, alfaVbeta5 in alfa5beta1 z 1,3,5-triazinskim skeletom [SL], Selective Modulators of Alpha5beta1 Integrine Receptors and Triple Modulators of Alphavbeta3, Alphavbeta5 and Alpha5beta1 Integrine Receptors with 1,3,5-Tri [EN]

The invention describes compounds with 1,3,5-triazine skeleton, which have shown a biological effect in biological tests on isolated alphaVbeta3, alphaIIbbeta3, alphaVbeta5 and alpha5beta1 integrine receptors. In the case of compound it is about a triple modulator alphaVbeta3, alphaVbeta5 and alpha5beta1, and in the case of compounds 126 and 127 about a selective modulator alpha5beta1.

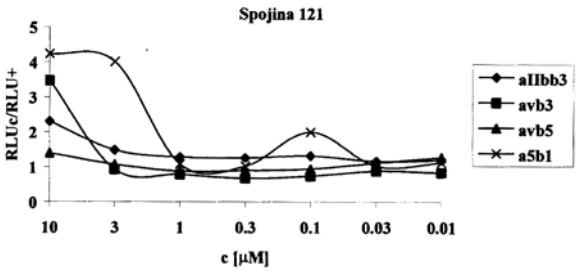

Biological Sciences

Biological sciences

Medical / health related

https://worldwide.espacenet.com/patent/search/family/040822888/publication/SI22675A?q=si22675

UIL RS

Double and Triple Modulators of Alphavbeta3, Alphallbbeta3, Alphavbeta5 and Alpha5beta1 Integrine Receptors with 1,2,4-Oxadiazoleskeleton

SI22676A

12. 11. 2007

University of Ljubljana, Faculty of Pharmacy [SI]

Kristina Nadrah, Slavko Pečar, Marija Sollner Dolenc

Dvojni in trojni modulatorji integrinskih receptorjev alfaVbeta3, alfaIIb-beta3, alfaVbeta5 in alfa5beta1 z 1,2,4-oksadiazolskim skeletom [SL], Double and Triple Modulators of Alphavbeta3, Alphallbbeta3, Alphavbeta5 and Alpha5beta1 Integrine Receptors with 1,2,4-Oxadiazoleskeleton [EN]

The invention describes compounds with the general formula where X group is an alkyl chain or benzene ring which may be unsubstituted or substituted on positions 2, 3, 5 or 6. R substituent may be an amidine group, a variously substituted phenoxy group attached via the methylene or ethylene bridge, or a benzimidazol, imidazol, pyridine or pyrimidine group attached to the basic structure via the benzamide group, where such compounds exhibit a selective biological activity on alphaVbeta3, alphaIIbbeta3, alphaVbeta5 or alpha5beta1 integrine receptors or are active on any pair or triplet of alphaVbeta3, alphaIIbbeta3, alphaVbeta5 or alpha5beta1 receptors.

/

Biological Sciences

Biological sciences

Medical / health related

https://worldwide.espacenet.com/patent/search/family/040822889/publication/SI22676A?q=si22676

UIL RS

Double and Triple Modulators of Alphavbeta3, Alphallbbeta3, Alphavbeta5 and Alpha5beta1 Integrine Receptors with 3-Phenyl-1,2,4-Oxadiazole Skeleton

SI22677A

12. 11. 2007

University of Ljubljana, Faculty of Pharmacy [SI]

Kristina Nadrah, Slavko Pečar, Marija Sollner Dolenc

Dvojni in trojni modulatorji integrinskih receptorjev alfaVbeta3, alfallbbeta3, alfaVbeta5 in alfa5beta1 s 3-fenil-1,2,4-oksadiazolskim skeletom [SL], Double and Triple Modulators of Alphavbeta3, Alphallbbeta3, Alphavbeta5 and Alpha5beta1 Integrine Receptors with 3-Phenyl-1,2,4-Oxadiazole Skeleton [EN]

The invention describes compounds with 3-phenyl-1,2,4-oxadiazole skeleton, which have shown a biological effect in biological tests on isolated alphaVbeta3, alphallbbeta3, alphaVbeta5 and alpha5beta1 integrine receptors. In the case of compounds 73 it is about a triple modulator alphaVbeta3, alphaVbeta5 and alpha5beta1, and in the case of compounds 93 and 103 about a selective alpha5beta1 integrine modulator. The compounds have the general formula where R1 is a methyl, ethyl, trifluoromethyl or hydroxi group. X is a heteroatom, e.g. O or N. Y is a methylene or carbonyl group, R2 is a differently long aliphatic chain with 4-6 C atoms or a phenyl ring which may be substituted on positions 2, 3, 4, 5 and 6. The R2 group may contain a carbonyl group. The R3 group may be an amidine group, a derivative of D-, L- or D,L- aminoacids with an aromatic or aliphatic side chain, e.g. phenylalanine and leucine, a differently long aliphatic chain, an acyl group, or it can contain also a carboxyl group.

/

Biological Sciences

Biological sciences

Medical / health related

https://worldwide.espacenet.com/patent/search/family/040822890/publication/SI22677A?q=si22677

UIL RS

Mild Chemically Cleavable Linker System

US8314215B2

1. 8. 2007

Matthew S. Bogyo [US], Marko Fonović [US], The Board of Trustees of the Leland Stanford Junior University [US], Stephen H. L. Verhelst [US]

Matthew S. Bogyo, Marko Fonović, Stephen H. L. Verhelst

Mild Chemically Cleavable Linker System

The invention relates to a linker system providing a small molecule reactive group, e.g., an activity based probe which binds to certain enzymes at the active site, linked through an aryl diazo linker to an affinity molecule such as biotin. The reactive group may comprise a number of functionalities known to react with a specific target to be studied. This enables the probe to be exposed to analytes, such as proteins and bind specifically to them to form a complex having an affinity molecule allowing immobilization of the bound analyte on an affinity column or other support, e.g. with streptavidin. Then, the linker is cleaved without causing removal of the affinity group or dissociation of the probe from the analyte. The linker is cleaved under mild reducing conditions, e.g., dithionite. The probe is synthesized along with the linker on a solid support.

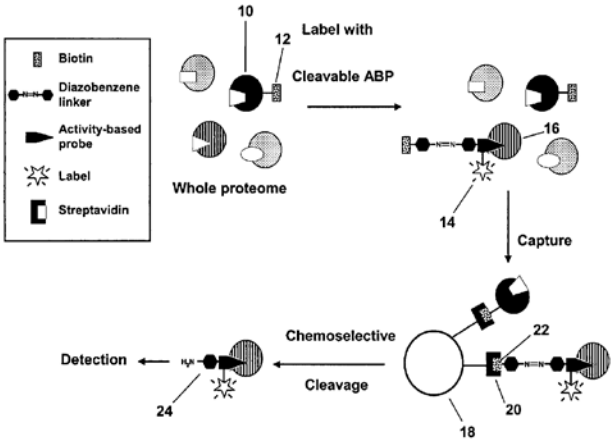

Biological Sciences

Biological sciences, Measurements and standards

Medical / health related

https://worldwide.espacenet.com/patent/search/family/039674647/publication/US8314215B2?q=US8314215B2

US

Extended patent application

WO2008094205A3

4. 8. 2006

Matthew S. Bogyo [US], Marko Fonović [US], The Board of Trustees of the Leland Stanford Junior University [US], Stephen H. L. Verhelst [US]

Matthew S. Bogyo, Marko Fonović, Stephen H. L. Verhelst

A Mild Chemically Cleavable Linker System

https://worldwide.espacenet.com/patent/search/family/039674647/publication/WO2008094205A3?q=WO2008094205A3

Ultrasound Elution of Biological Ligands

EP2015072A1

12. 7. 2007

Lek Pharmaceuticals d. d. [SI]

Tomaž Bratkovič, Petra Ekar, Samo Kreft, Mojca Lunder, Borut Štrukelj, Uroš Urleb

Ultrasound Elution of Biological Ligands [EN]

The present invention discloses a method for analyzing the binding of a biological ligand to a target, comprising the steps of (1) providing one, two, or more different candidates for a biological ligand, (2) contacting said candidate(s) with a target, wherein for each candidate the target is the same or has the same structure, (3) applying ultrasound to the target-bound candidates for a ligand. In preferred embodiments, the invention

relates to the use of the invention for screening biological libraries and in the context of phage display. Preferably, the ultrasound is applied at acidic pH. The ultrasound may be applied during an elution and/or a wash step. The candidate for a biological ligand is preferably chosen from the group of peptides, peptidomimetics, antibodies, nucleic acids, carbohydrates, saccharides, oligosaccharides, polysaccharides, and glycosylated peptides. Furthermore, the present invention discloses the use of ultrasound during an elution and/or washing step in the screening of a biological library and the use of the method of the invention in a high-throughput screening.

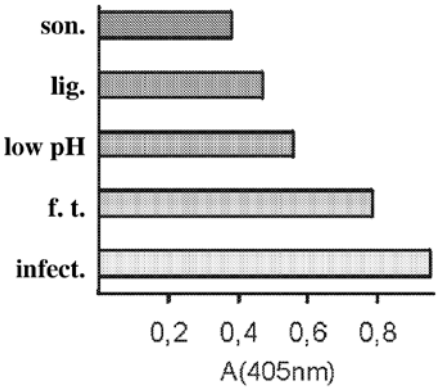

Biological Sciences

Biological sciences

Medical / health related

https://worldwide.espacenet.com/patent/search/family/038532328/publication/EP2015072A1?q=EP2015072A1

WIPO

Extended patent application

WO2009007463A8

14. 7. 2008

Tomaž Bratkovič [SI], Petra Ekar [SI], Samo Kreft [SI], Lek Pharmaceuticals d. d. [SI], Mojca Lunder [SI], Borut Štrukelj [SI], Uroš Urleb [SI]

Tomaž Bratkovič, Petra Ekar, Samo Kreft, Mojca Lunder, Borut Štrukelj, Uroš Urleb

Ultrasound Elution of Biological Ligands

https://worldwide.espacenet.com/patent/search/family/038532328/publication/WO2009007463A8?q=%20WO2009007463A8

Procedure of Synthesis of Amidines and Their Derivatives

SI22487A

19. 4. 2007

University of Ljubljana, Faculty of Pharmacy [SI]

Kristina Nadrah, Slavko Pečar, Marija Sollner Dolenc

Postopek sinteze amidinov in njihovih derivatov [SL], Procedure of Synthesis of Amidines and Their Derivatives [EN]

The invention describes a procedure of preparation of amidines and their salts, according to which amidoximes have been reduced with potassium formate in the presence of 10 % Pd-C catalyst. The starting amidoximes are easily accessible and the procedure enables a direct preparation of amidines in the form of salts.

/

Biological Sciences

Industrial manufacturing, material and transport, Biological sciences

Industrial products

https://worldwide.espacenet.com/patent/search/family/039889191/publication/SI22487A?q=si22487

UIL RS

2006

Diazenedicarboxamides as Inhibitors of D-Alanyl-D-Alanin Ligase

SI22338A

18. 6. 2006

University of Ljubljana, Faculty of Pharmacy [SI], University of Ljubljana, Faculty of Chemistry and Chemical Technology [SI], The University Of Leeds, Antimicrobial Research Centre, Institute Of Cellular and Molecular Biology [GB]

Sergeja Bombek, Julieanne Bostock, Alja Brajić, Ian Chopra, Stanislav Gobec, Marijan Kočevar, Andreja Kovač, Roman Lenaršič, Slavko Pečar, Slovenko Polanc

Diazendikarboksamidi kot inhibitorji D-alanil-D-alanin ligaze [SL], Diazenedicarboxamides as Inhibitors of D-Alanyl-D-Alanin Ligase [EN]

Described are compounds of the general formula (I) and pharmaceutically acceptable salts of these compounds. Individual substituents are clearly defined in the text and claims. The compounds are effective inhibitors of the enzyme D-alanyl-D-alanin ligase (Ddl).

/

Biological Sciences

Biological sciences

Medical / health related

https://worldwide.espacenet.com/patent/search/family/038777962/publication/SI22338A?q=si22338

UIL RS

Extended patent application

EP1889831A3

7. 8. 2007

University of Ljubljana, Faculty of Pharmacy [SI], University of Ljubljana, Faculty of Chemistry and Chemical Technology [SI], The University Of Leeds, Antimicrobial Research Centre, Institute Of Cellular and Molecular Biology [GB]

Sergeja Bombek, Julieanne Bostock, Alja Brajić, Ian Chopra, Stanislav Gobec, Marijan Kočevar, Andreja Kovač, Roman Lenaršič, Slavko Pečar, Slovenko Polanc

Diazenedicarboxamides as Inhibitors of D-Alanyl-D-Alanin Ligase

https://worldwide.espacenet.com/patent/search/family/038777962/publication/EP1889831A3?q=EP1889831A3

New Arylsulphonohydrazide MurC and MurD Enzyme Inhibitors

SI22254A

13. 4. 2006

University of Ljubljana, Faculty of Pharmacy [SI]

Didier Blanot, Rok Frlan, Stanislav Gobec, Andreja Kovač, Aleš Obreza, Slavko Pečar, Nina Vobovnik

Novi arilsulfonohidrazidni inhibitorji encimov MurC in MurD [SL], New Arylsulphonohydrazide MurC and MurD Enzyme Inhibitors [EN]

This invention relates to the compounds with the generic formula I and pharmaceutically acceptable salts of theses compounds. The individual substituents are clearly defined in the text and applications. The compounds are currently the most effective low-molecular enzyme inhibitors: MurC UDP-N-acetylmuramate: L-alanin ligase) and MurC (UDP-N-acetylmuramoil-L-alanin: D- glutamat ligase). The amorphous atorvastatin sodium and new polymorphs of forms I, II, III, IV and V as well as procedures for their preparation along with their integration into solid oral dosage forms are described.

/

Biological Sciences

Biological sciences

Medical / health related, Industrial products

https://worldwide.espacenet.com/patent/search/family/038349493/publication/SI22254A?q=si22254

UIL RS

Extended patent application

EP1845083A3

11. 4. 2007

Univerza v Ljubljani, Fakulteta za Farmacijo [SI]

Didier Blanot, Rok Frlan, Stanislav Gobec, Andreja Kovač, Aleš Obreza, Slavko Pečar, Nina Vobovnik

New Arylsulfonohydrazide Inhibitors of Enzymees MurC and MurD

https://worldwide.espacenet.com/patent/search/family/038349493/publication/EP1845083A3?q=EP1845083A3

2005

Procedure for the Desulphurisation of Exhaust Gases with Integrated Equipment

SI21956A

9. 2. 2005

ESOTECH d. d. [SI]

Andrej Stergaršek

Postopek za razžvepljevanje dimnih plinov z integrirano opremo [SL], Procedure for the Desulphurisation of Exhaust Gases with Integrated Equipment [EN]

The present invention relates to a procedure for the desulphurisation of exhaust gases with integrated equipment providing the possibility that several phases of the wet calcite process of desulphurisation of exhaust gases is carried out within the same equipment, which results in a considerable reduction of the number of required appliances and devices with a generally quite complex system. During preparation of the calcite suspension and its dosage to the absorber for dampening the calcite, a small part of the absorption suspension is constantly diverted directly from the vertical recirculation pipe for the absorptive suspension, thus enabling with this flow the dampening and flushing of calcite as soon as it leaves the dosage device and is released into the wet worm gear, so that the prepared calcite suspension is by way of gravity running into the mixing container beneath the gas washing device. The hydrocyclones are fuelled from the vertical pipes of the recirculation pumps without the application of special pumps. During the time, required for maintenance, the gypsum is stored in the mixing container of the gas washing device so that the concentration of gypsum is increased, while after that the solid particles content is reduced by hydrocyclones to the standard operation level.

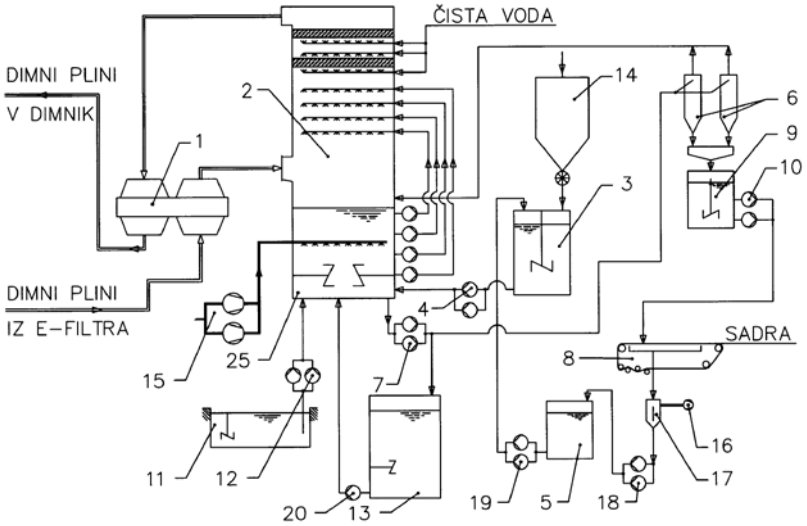

Biological Sciences

Protecting man and environment, Other industrial technologies

Consumer related, Industrial products

https://worldwide.espacenet.com/patent/search/family/036951056/publication/SI21956A?q=si21956

UIL RS

Process for Preparing Clopidrogel Hydrogen Sulfate of Form I

EP1693375A1

21. 2. 2005

Krka d. d. [SI]

Milena Benedik, Samo Gerkšič, Mira Gričar, Berta Kotar-Jordan, Miloš Ružič, Matej Smrkolj, Damir Vrančić

Process for Preparing Clopidrogel Hydrogen Sulfate of Form I

The invention relates to a process for the preparation of form I clopidogrel hydrogen sulfate through suspending clopidogrel hydrogen sulfate in an alkane.

/

Biological Sciences

Biological sciences

Medical / health related

https://worldwide.espacenet.com/patent/search/family/034933849/publication/EP1693375A1?q=EP1693375A1

EPO

Extended patent application

WO2006087226A1

20. 2. 2006

Milena Benedik [SI], Samo Gerkšič [SI], Mira Gričar [SI], Berta Kotar-Jordan [SI], Krka d. d. [SI], Miloš Ružič [SI], Matej Smrkolj [SI], Damir Vrančić [SI]

Milena Benedik, Samo Gerkšič, Mira Gričar, Berta Kotar-Jordan, Miloš Ružič, Matej Smrkolj, Damir Vrančić

Process for Preparing Clopidrogel Hydrogen Sulfate of Form I

https://worldwide.espacenet.com/patent/search/family/034933849/publication/WO2006087226A1?q=WO2006087226A1

2003

Procedure of Synthesis of Amidines and Their Derivatives On Solid Supports and Its Application for Preparation of Combinatoric Libraries

SI21559A

29. 8. 2003

University of Ljubljana, Faculty of Pharmacy [SI]

Jožko Cesar, Slavko Pečar

Postopek sinteze amidinov in njihovih derivatov na trdnih nosilcih ter njegova uporaba za pripravo kombinatoričnih knjižnic [SL], Procedure of Synthesis of Amidines and Their Derivatives On Solid Supports and Its Application for Preparation of Combinatoric Libraries [EN]

The invention is describing a procedure for preparation of amidines, their salts and derivatives on solid supports, according to which amidoximes bound on solid supports are reduced with tin (II) chloride. Because amidoximes, required for the synthesis, are easily accessible from nitriles bound preliminarily to a support, the procedure enables the preparation of parallel and combinatoric libraries of compounds containing amidine group or its derivatives. Such libraries may be applied for planning and research in new medical active ingredients.

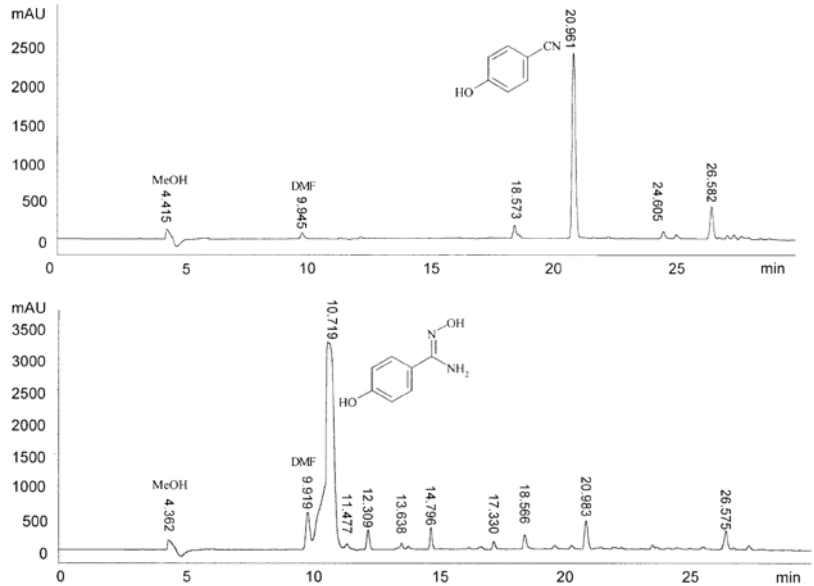

Biological Sciences

Biological sciences, Industrial manufacturing, material and transport, Measurements and standards

Medical / health related, Industrial products

https://worldwide.espacenet.com/patent/search/family/034225642/publication/SI21559A?q=si21559

UIL RS

Procedure for Evaluation of Fraction of Hybrid Cells and Cell Products by Means of Confocal Microscopy and Autoclavable Electrofusion Chamber

SI21661A

30. 12. 2003

Celica d. o. o. [SI]

Sonja Grilc, Helena Chowdhury Haque, Marko Kreft, Igor Poberaj, Robert Zorec

Postopek za evaluacijo deleža hibridnih celic in celičnih izdelkov s konfokalno mikroskopijo in avtoklavabilna elektrofuzijska kamrica [SL], Procedure for Evaluation of Fraction of Hybrid Cells and Cell Products by Means of Confocal Microscopy and Autoclavable Electrofusion Chamber [EN]

The subject of the invention belonging to the field of biomedicine technology is a procedure of evaluation of the fraction of hybrid cells and cell products - hybridoms - in a cell vaccine, which comprises measurement of surface area of colocalized pixels on a picture taken by a multichannel confocal microscope, as well as an autoclavable electrofusion chamber intended for multiple use in preparation of hybridom cells. The procedure for quantification of fraction of hybrid cells enables the evaluation of a hybrid cell fraction by measuring surface areas of colocalised pixels and simultaneous visualisation and documentation of the procedure. The applicability of the procedure is wide also for any cases where fractions of one or several cell types or structures on a picture are determined. The subject of invention is also a respective autoclavable electrofusion chamber, more precisely, a chamber for the fusion of biological cells in the electrical field. The invention

refers to the structure of the electrofusion chamber which is intended for multiple application. The chamber is composed of an upper part (1), lower part (2), glass plate (4) with electrodes, o-ring, cover and nut, which all can be autoclaved separately and put together as a sterile electrofusion chamber very easily in a sterile particle-free chamber. Besides, it is possible to change the size of the electrofusion surface by changing individual parts of the electrofusion chamber and thus fuse various volumes of cell suspensions in the chamber. The electrofusion chamber is made of biocompatible materials and is suitable for preparation of hybrid cells for human vaccines.

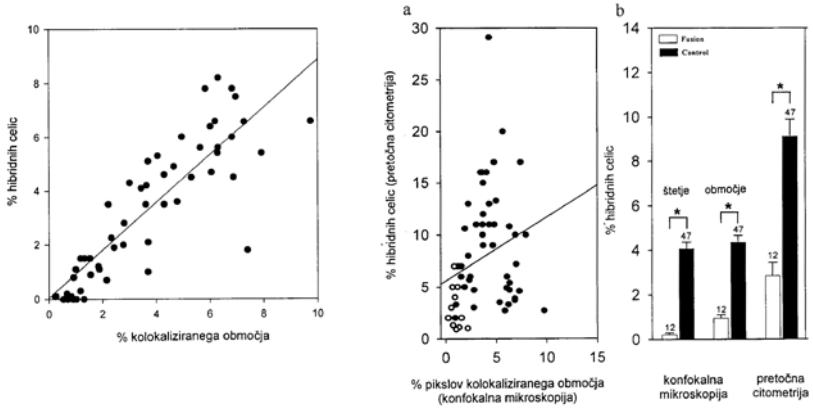

Biological Sciences

Physical and exact sciences, Biological sciences

Medical / health related

https://worldwide.espacenet.com/patent/search/family/034738131/publication/SI21661A?q=si21661

UIL RS

Extended patent application

WO2005063961A3

28. 12. 2004

Celica, d. o. o. [SI], Mateja Gabrijel [SI], Sonja Grilc [SI], Helena Haque Chowdhury [SI], Marko Kreft [SI], Igor Poberaj [SI], Robert Zorec [SI]

Mateja Gabrijel, Sonja Grilc, Helena Chowdhury Haque, Marko Kreft, Igor Poberaj, Robert Zorec

A Procedure of Evaluating the Yield of Hybridoma Cells and Cell Products by Means of Confocal Microscopy and Autoclavable Electrofusion Chamber

https://worldwide.espacenet.com/patent/search/family/034738131/publication/WO2005063961A3?q=WO2005063961A3

Antithrombotic Active Ingredients with Dual Mechanism of Action Basedon 3,4-Dihydro-2H-1,4-Benzoxazine Skeleton

SI21658A

28. 11. 2003

Lek d. d. [SI], University of Ljubljana [SI]

Marko Anderluh, Danijel Kikelj, Janez Mravljak, Slavko Pečar, Andrej Preželj, Marija Sollner Dolenc, Mojca Stegnar, Petra Štefančin Anderluh

Antitrombotične učinkovine z dualnim mehanizmom delovanja na osnovi 3,4-dihidro-2H-1,4-benzoksazinskega skeleta [SL], Antithrombotic Active Ingredients with Dual Mechanism of Action Basedon 3,4-Dihydro-2H-1,4-Benzoxazine Skeleton [EN]

The invention relates to compounds with the general formula (I) and their pharmaceutically acceptable salts, where substituents have meanings given in the description. The compounds are used as antithrombotic active ingredients with inhibiting action on aggregation of thrombocytes and simultaneously, on inhibition of thrombin and/or Xa factor.

/

Biological Sciences

Physical and exact sciences, Biological sciences

Medical / health related

https://worldwide.espacenet.com/patent/search/family/034632243/publication/SI21658A?q=si21658

UIL RS

Extended patent application

WO2005051934A1

26. 11. 2004

Lek d. d. [SI], University of Ljubljana [SI], Marko Anderluh [SI], Danijel Kikelj [SI], Janez Mravljak [SI], Slavko Pečar [SI], Andrej Prezelj [SI], Marija Sollner Dolenc [SI], Petra Štefanič Anderluh [SI], Mojca Stegnar [SI]

Marko Anderluh, Danijel Kikelj, Janez Mravljak, Slavko Pečar, Andrej Preželj, Marija Sollner Dolenc, Mojca Stegnar, Petra Štefančin Anderluh

Antithrombotic compounds with dual function

https://worldwide.espacenet.com/patent/search/family/034632243/publication/WO2005051934A1?q=WO2005051934A1

2002

Method for Preparation of Nanoparticles

SI21222A

28. 5. 2002

Krka d. d.

Pegi Ahlin, Mateja Cegnar, Janko Kos, Julijana Kristl, Franc Vrečer

Postopek za pripravo nanodelcev [SL], Method for Preparation of Nanoparticles [EN]

The submitted invention refers to a new method used in preparation of nanoparticles. In particular, it relates to a method in which a water-in-oil-in-water (W/O/W) double emulsion technique applied under low-level energy conditions is used to prepare biologically degradable nanoparticles from copolymers of lactic and glycol acids. The technique includes simultaneous processes of mixing and sonification with nanoparticles containing one or more active compounds while biological activity of the active compound involved is preserved.

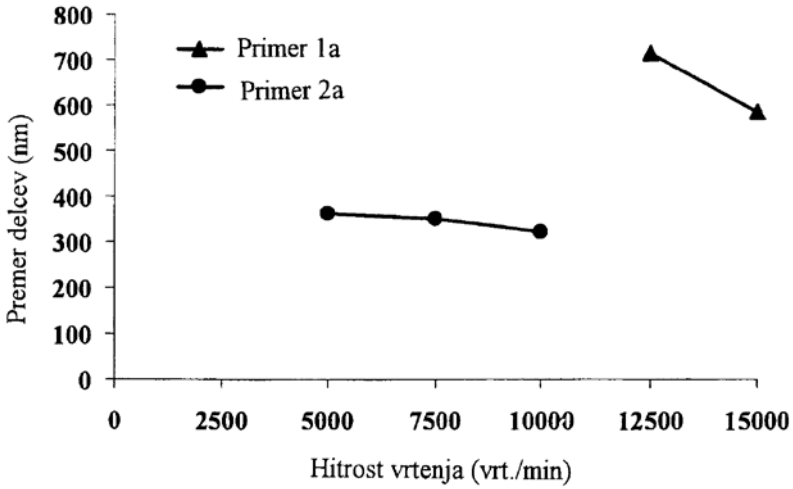

Biological Sciences

Biological sciences

Medical / health related, Industrial products

https://worldwide.espacenet.com/patent/search/family/029580222/publication/SI21222A?q=si21222a

UIL RS

Extended patent application

AU2003228202A1

27. 5. 2003

Krka d. d. [SI]

Franc Vrecer, Janko Kos, Julijana Kristl, Mateja Cegnar, Pegi Ahlin

Process for the Production of Nanoparticles, Wherein Low Mechanical and Sonic Energies are Used Simultaneously

https://worldwide.espacenet.com/patent/search/family/029580222/publication/AU2003228202A1?q=AU2003228202A1

Extended patent application

EP1558224A1

27. 5. 2003

Krka d. d. [SI]

Pegi Ahlin, Mateja Cegnar, Janko Kos, Julijana Kristl, Franc Vrečer

Process for the Production of Nanoparticles, Wherein Low Mechanical and Sonic Energies are Used Simultaneously

https://worldwide.espacenet.com/patent/search/family/029580222/publication/EP1558224A1?q=EP1558224A1

Extended patent application

WO03099262A1

27. 5. 2003

Ahlin Pegi [SI], Cegnar Mateja [SI], Kos Janko [SI], Kristl Julijana [SI], Krka d. d. [SI], Vrecer Franc [SI]

Pegi Ahlin, Mateja Cegnar, Janko Kos, Julijana Kristl, Franc Vrečer

Process for the Production of Nanoparticles, Wherein Low Mechanical and Sonic Energies are Used Simultaneously

https://worldwide.espacenet.com/patent/search/family/029580222/publication/WO03099262A1?q=WO03099262A1

2001

Process and Facility for Decrease of Organic Substances and Carbon Content in Firing Residues of Solid Fuels and in Combustion and Co-Combustion Residues of Waste

SI20993A

13. 7. 2001

Andrej Stergaršek [SI]

Andrej Stergaršek

Postopek in naprava za zmanjševanje vsebnosti organskih snovi in ogljika v ostankih kurjenja trdnih goriv in v ostankih sežiga ter sosežiga odpadkov [SL], Process and Facility for Decrease of Organic Substances and Carbon Content in Firing Residues of Solid Fuels and in Combustion and Co-Combustion Residues of Waste [EN]

The invention relates to a process intended for additional thermal treatment of firing, co-combustion and combustion residues containing excessive quantities of unburnt organic matter. Residues are indirectly or directly heated with hot gases, flame or electrical energy and organic substances present are oxidized with air oxigen which is fed into firing, co-combustion and combustion residues, after which all the gases generated are fed into a firing place or a combustion plant where their caloric values is exploited. A facility for additional thermal treatment of firing, co-combustion and combustion residues is further described, which enables residues to come in contact with air oxigen, to be heated to the required temperature and to be offered a retention time long enough to run all the necessary reactions of subsequent and additional oxidation of the organic matter. The process is running typically at a temperature between 400 and 800 degrees Celsius, but it may be also higher or lower in case the properties of residues allow this. Residues are retained at the required temperature long enough to reach a sufficiently high degree of oxidation. The retention time amounts typically to one hour but may be longer or shorter, depending on residues' properties. When heating and oxidizing organic matter in firing, co-combustion and combustion residues according to the process described, persistent organic pollutants on solid particles of residues are also partially oxidized and transformed into simple inorganic compounds and partially evaporated. All these substances are fed together into the firing place or a respective combustion plant where a further decomposition of persistent organic pollutants into simple inorganic molecules is taking place.

/

Biological Sciences

Energy, Protecting man and environment

Energy, Other

https://worldwide.espacenet.com/patent/search/family/020432941/publication/SI20993A?q=si20993

UIL RS

Purified Proenzyme of Dipeptidyl Peptidase I (Pro-DPPI)

WO0194597A1

8. 6. 2001

Soeren W. Dahl [DK], Connie Lauritzen [DK], John Pedersen [DK], Boris Turk [SI], Prozymex A/S [DK]

Boris Turk, Connie Lauritzen, John Pedersen, Soren W. Dahl

Purified Proenzyme of Dipeptidyl Peptidase I (Pro-DPPI)

The present invention relates to a substantially pure proenzyme of dipeptidyl peptidase I (pro-DPPI) and mutants thereof. The invention disclosed herein presents novel and fundamentally inventive means of producing substantially pure pro-DPPI in milligram to gram scale quantities and of selectively purifying unprocessed pro-DPPI from mixtures of pro-DPPI and DPPI. The present invention further relates to biochemical and pharmaceutical applications of pro-DPPI and the generation of monoclonal and polyclonal antibodies against pro-DPPI and the uses thereof.

```
                                                                                
                                                                                
  1  DTPANCTYLD LLGTWVFQVG SSGSQRDVNC SVMGPQEKKV VVYLQKLDTA YDDLGNSGHF   60
     ↳ Residual propart
                                                                                
 61  TIIYNQGFEI VLNDYKWFAF FKYKEEGSKV TTYCNETMTG WVHDVLGRNW ACFTGKKVGT  120
                                                                                
121  ASENVYVNTA HLKNSQEKYS NRLYKYDHNF VKAINAIQKS WTATTYMEYE TLTLGDMIRR  180
                    ↳ Activation peptide
                                                                                
181  SGGHSRKIPR PKPAPLTAEI QQKILHLPTS WDWRNVHGIN FVSPVRNQAS CGSCYSFASM  240
                                 ↳ Heavy chain
                                                                                
241  GMLEARIRIL TNNSQTPILS PQEVVSCSQY AQGCEGGFPY LIAGKYAQDF GLVEEACFPY  300
                                                                                
301  TGTDSPCKMK EDCFRYYSSE YHYVGGFYGG CNEALMKLEL VHHGPMAVAF EVYDDFLHYK  360
                                                                                
361  KGIYHHTGLR DPFNPFELTN HAVLLVGYGT DSASGMDYWI VKNSWGTGWG ENGYFRIRRG  420
                ↳ Light chain
                                                                                
421  TDECAIESIA VAATPIPKL                                                439
```

Biological Sciences

Biological sciences

Medical / health related, Genetic engineering / molecular biology

https://worldwide.espacenet.com/patent/search/family/026068831/publication/WO0194597A1?q=WO0194597A1

WIPO

Extended patent application

WO0194597A1

8. 6. 2001

Prozymex As [DK]

Soeren W Dahl, Connie Lauritzen, John Pedersen, Boris Turk

Purified Proenzyme of Dipeptidyl Peptidase I (Pro-DPPI)

https://worldwide.espacenet.com/patent/search/family/026068831/publication/AU6378601A?q=%20AU6378601A

Monoclonal Antibody Neutralizing Cathepsin B Activity and Its Applications

SI20922A

18. 5. 2001

Krka d. d. [SI]

Marco Bestagno, Oscar R Burrone, Xiaohui Fan, Nataša Kopitar-Jerala, Janko Kos, Aleš Premzl, Vito Turk

Monoklonsko protitelo, ki nevtralizira aktivnost katepsina B, in njegove uporabe [SL], Monoclonal Antibody Neutralizing Cathepsin B Activity and Its Applications [EN]

The present invention relates to a monoclonal antibody capable of neutralizing Cathepsin B. In particular, the present invention is concerned with the use of such an antibody for the treatment and detection of diseases associated with an over-expression and/or excessive activity of Cathepsin B such as cancer or arthritis.

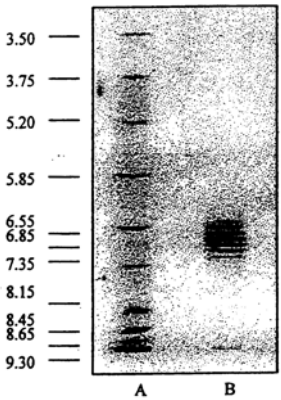

A - standardi

B - MAb 2A2 (konc. 3,4 mg/ml)

Biological Sciences

Biological sciences

Medical / health related

https://worldwide.espacenet.com/patent/search/family/020432896/publication/SI20922A?q=si20922

UIL RS

Extended patent application

CA2447313A1

2. 4. 2002

Krka d. d. [SI]

Marco Bestagno, Oscar R Burrone, Xiaohui Fan, Nataša Kopitar-Jerala, Janko Kos, Aleš Premzl, Vito Turk

Monoclonal Antibody Neutralizing Cathepsin B Activity and Uses Thereof

https://worldwide.espacenet.com/patent/search/family/020432896/publication/CA2447313A1?q=CA2447313A1

Extended patent application

EP1390409A2

2. 4. 2002

Krka d. d. [SI]

Marco Bestagno, Oscar R Burrone, Xiaohui Fan, Nataša Kopitar-Jerala, Janko Kos, Aleš Premzl, Vito Turk

Monoclonal Antibody Neutralizing Cathepsin B Activity and Uses Thereof

https://worldwide.espacenet.com/patent/search/family/020432896/publication/EP1390409A2?q=EP1390409A2

Extended patent application

JP2005507373A

2. 4. 2002

/

/

/

https://worldwide.espacenet.com/patent/search/family/020432896/publication/JP2005507373A?q=JP2005507373A

Extended patent application

WO02094881A3

2. 4. 2002

Marco Bestagno [IT], Oscar R. Burrone [IT], Xiaohui Fan [SI], Nataša Kopitar Jerala [SI], Janko Kos [SI], Krka d. d. [SI], Aleš Premzl [SI], Vito Turk [SI]

Marco Bestagno, Oscar R Burrone, Xiaohui Fan, Nataša Kopitar-Jerala, Janko Kos, Aleš Premzl, Vito Turk

Monoclonal Antibody Neutralizing Cathepsin B Activity and Uses Thereof

https://worldwide.espacenet.com/patent/search/family/020432896/publication/WO02094881A3?q=WO02094881A3

Extended patent application

US2005260207A1

24. 5. 2004

/

Marco Bestagno, Oscar R Burrone, Xiaohui Fan, Nataša Kopitar-Jerala, Janko Kos, Aleš Premzl, Vito Turk

Monoclonal Antibody Neutralizing Cathepsin B Activity and Uses Thereof

https://worldwide.espacenet.com/patent/search/family/020432896/publication/US2005260207A1?q=US2005260207A1

Physical Sciences

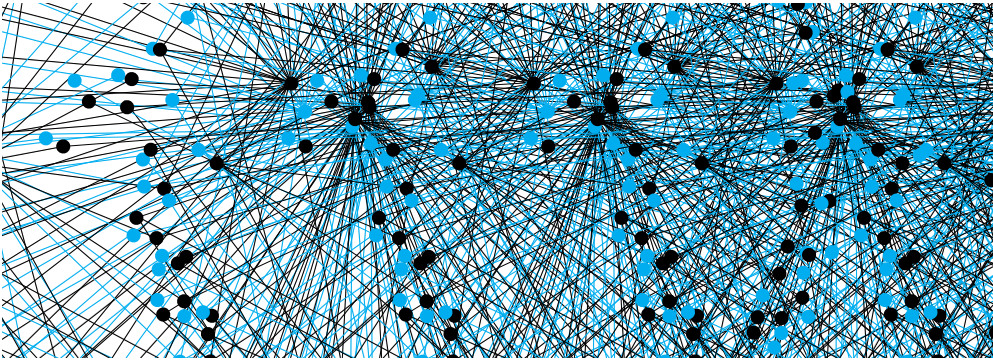

2018

Memory Device and Method for Its Operation

GB2579058A

16. 11. 2018

Jožef Stefan Institute [SI], Center of Excellence on Nanoscience and Nanotechnology [SI]

Anže Mraz, Damjan Svetin, Dragan Mihailović, Rok Venturini

Memory Device and Method for Its Operation

The invention presents a memory device (and method of use) whereby a switchable resistive element 4 and a superconductor element 3 are connected electrically in parallel (and preferably disposed in parallel in a stack). The switchable resistive element comprises active material, switchable between first and second electrical resistivity (p1, p2) values at the same temperature, (p1 different to p2). The active material may be 1T-TaS2, a layered dichalcogenide, chalcogenide or oxide material, and demonstrate resistive switching, charge density wave (CDW ordering), memristor or memory resistor behaviour. The superconductor element is operable such that part or all of the superconductor element is switchable from a superconducting state to a non-superconducting state, and when this occurs a current injection passes through switchable resistive element capable of switching the switchable resistive element between first and second electrical resistivity values, representing first and second memory states. The memory device may be volatile or non-volatile. The superconductor may be a narrow channel or nanowire and include a constriction region to switch to a non superconducting state in preference

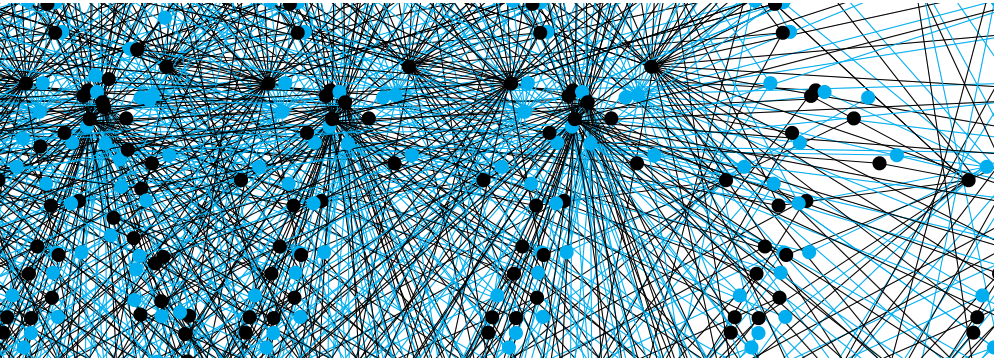

to the reminder of the superconductor element. The device may be a two or three terminal device and current injection may be provided in a pulsed mode or continuous mode by an external circuit to activate the switch. Alternatively part of the superconductive element may be switched from superconducting to non-superconducting state by temperature.

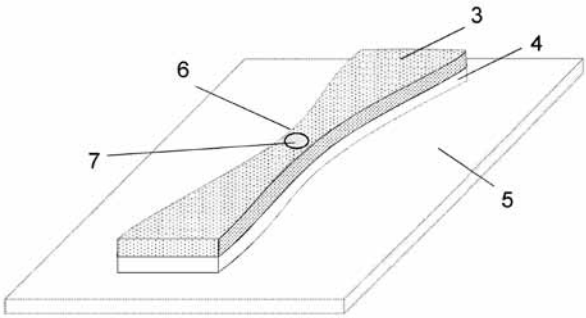

Physical Sciences

Electronics, IT and telecoms

Computer related, Other electronics related

https://worldwide.espacenet.com/patent/search/family/064740161/publication/GB2579058A?q=svetin%20mraz%20venturini

GB

Extended patent application

WO2020099584A1

14. 11. 2019

Jožef Stefan Institute [SI], Center of Excellence on Nanoscience and Nanotechnology [SI]

Anže Mraz, Damjan Svetin, Dragan Mihailović, Rok Venturini

Memory Device and Method for Its Operation

https://worldwide.espacenet.com/patent/search/family/064740161/publication/WO2020099584A1?q=WO2020099584A1

Heater for Lab-on-a-Chip

GB2572606A

5. 4. 2018

Jožef Stefan Institute [SI]

Aman Russom, Marko Mahne, Matjaž Vencelj, Tadej Kokalj

Heater for Lab-on-a-Chip

The object of the invention is a device, a lab-on-a-chip, comprising a biochemical testing apparatus (fig 2;202) and an electrically conducting element 105 wherein in use the disc is rotated relative to one or more magnets, so as to induce an electrical current in the electrically conducting element, thereby heating the biochemical testing apparatus. A system comprising the lab on a disc, a motor 103 to which the disc is releasably attached such that the disc is rotatable, and one or more magnets 108a, 108e located proximate to the disc such that when the motor rotates the lab on a disc, an electrical current is induced in the electrically conducting element. The temperature of the disc is controlled by controlling the rotational frequency of the disc or the distance between the one or more magnets and the electrically conducting element. The electrically conducting element may be a plate or foil formed of copper. The lab on a disc may further comprise a temperature sensor 106 and a transmitter 102 to transmit the sensed temperature. Ideally, the transmitter comprises one or more light emitting diodes which turn on and off at a frequency dependent upon the sensed temperature.

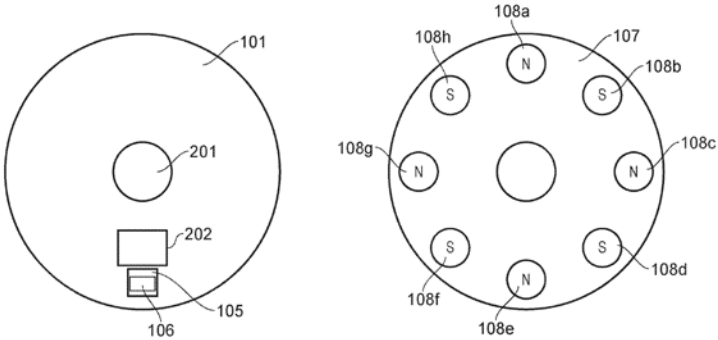

Physical Sciences

Electronics, IT and telecoms, Physical and exact sciences, Biological sciences

Genetic engineering / molecular biology, Medical / health related

https://worldwide.espacenet.com/patent/search/family/062203013/publication/GB2572606A?q=GB2572606A

UIL RS

Extended patent application

EP3549673A1

4. 4. 2019

Jožef Stefan Institute [SI]

Aman Russom, Marko Mahne, Matjaž Vencelj, Tadej Kokalj

Heater for Lab-on-a-Chip

https://worldwide.espacenet.com/patent/search/family/062203013/publication/EP3549673A1?q=EP3549673A1

Extended patent application

SI25635A

27. 3. 2019

Jožef Stefan Institute [SI]

Aman Russom, Marko Mahne, Matjaž Vencelj, Tadej Kokalj

Laboratorij na disku

https://worldwide.espacenet.com/patent/search/family/062203013/publication/SI25635A?q=%20SI25635A

2017

Procedure for Synthesis of Metal Molybdates and Wolframates from Molybdenum and Wolfram Carbides and Nitrides

SI25549A

16. 11. 2017

Jožef Stefan Institute [SI]

Aleš Mrzel, Damjan Vengust

Postopek za sintezo kovinskih molibdatov in volframatov iz molibdenovih in volframovih karbidov in nitridov [SL], Procedure for Synthesis of Metal Molybdates and Wolframates from Molybdenum and Wolfram Carbides and Nitrides

The subject of the invention is a process for the synthesis of metal molybdates and metal tungstates from molybdenum and tungsten carbides and nitrides. The invention relates to the synthesis of metal molybdates and metal tungstates from molybdenum and tungsten carbides and nitrides by the method of converting molybdenum and tungsten carbides and nitrides in the presence of a solution of metal-containing reactive compounds. This process allows the synthesis of large amounts of metal molybdates and metal tungstates from molybdenum and tungsten carbides and nitrides.

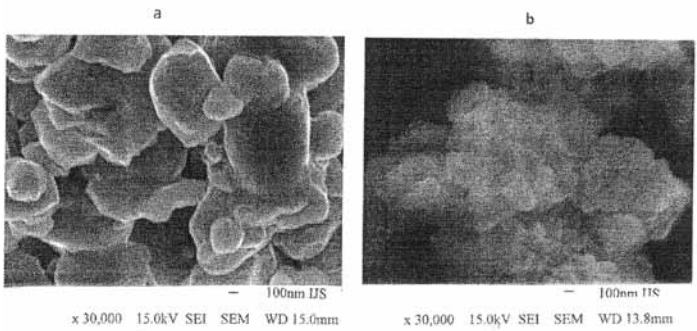

Physical Sciences

Physical and exact sciences, Other industrial technologies

Industrial products, Other

https://worldwide.espacenet.com/patent/search/family/064959080/publication/SI25549A?q=SI25549A

UIL RS

Extended patent application

EP3486218A1

14. 11. 2018

Jožef Stefan Institute [SI]

Aleš Mrzel, Damjan Vengust

Procedure for Synthesis of Metal Molybdates and Tungstates from Molybdenum and Tungsten Carbides and Nitrides

https://worldwide.espacenet.com/patent/search/family/064959080/publication/EP3486218A1?q=pn%3DEP3486218A1

Image Enhancement System for Bone Disease Evaluation

US10445878B2

9. 5. 2017

Wisconsin Alumni Research Foundation [US]

Tyler Bradshaw, Robert Jeraj, Timothy Perk

Image Enhancement System for Bone Disease Evaluation

This patent refers to use of a standardized skeleton template to normalize medical image data of the skeleton to eliminate variations in the medical image data related to physiological variations in a normal patient thereby better accentuating disease conditions.

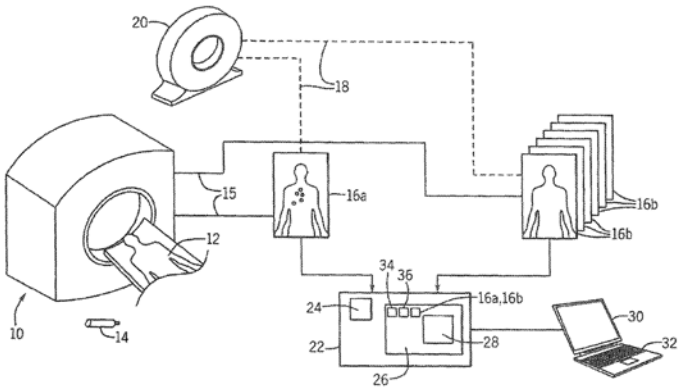

Physical Sciences

Electronics, IT and telecoms, Measurements and standards

Computer related, Medical / health related

https://worldwide.espacenet.com/patent/search/family/064096098/publication/US10445878B2?q=US10445878

US

Device and Method for the Location and Identification of a Radiation Source

US10191161B1

3. 5. 2017

AISense d. o. o. [SI], Consolidated Nuclear Security, LLC [US], Jožef Stefan Institute [SI]

Andrej Košiček, Jonathan S. Morrell, Toni Petrovič, Ashley C. Stowe, Matjaž Vencelj

Device and Method for the Location and Identification of a Radiation Source

The subject of the invention is a handheld device for the location and identification of a radiation source, including: a radiation transparent housing; a radiation locator device disposed within the radiation trans-

parent housing operable for determining the location of the radiation source, wherein the radiation locator device includes a plurality of gamma detection crystals arranged in a geometric pattern and separated by a gamma shielding material, a plurality of detectors coupled to the plurality of gamma detection crystals, and a processor module coupled to the plurality of detectors; one or more of a neutron detection crystal and a gamma spectroscopy crystal disposed within the radiation transparent housing adjacent to the radiation locator device; and one or more detectors coupled to the one or more of the neutron detection crystal and the gamma spectroscopy crystal and the processor module; wherein the one or more of the neutron detection crystal and the gamma spectroscopy crystal, the one or more detectors, and the processor module are collectively operable for identifying the radiation source.

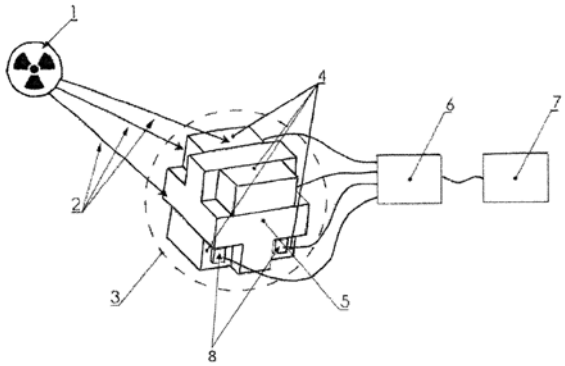

Physical Sciences

Physical and exact sciences, Protecting man and environment, Energy, Other industrial technologies, Measurements and standards

Other electronics related, Medical / health related, Energy, Industrial products

https://worldwide.espacenet.com/patent/search/family/065032090/publication/US10191161B1?q=US10191161B1

US

Device and Method for Locating a Radiation Emitting Source Via Angular Dependence Using a Single Detection Crystal

US10054697B1

11. 4. 2017

AISense d. o. o. [SI], Consolidated Nuclear Security LLC [US], Jožef Stefan Institute [SI]

Andrej Košiček, Jonathan S. Morrell, Toni Petrovič, Ashley C. Stowe, Matjaž Vencelj

Device and Method for Locating a Radiation Emitting Source Via Angular Dependence Using a Single Detection Crystal

The subject of the invention is a device for sensing, locating, and characterizing a radiation emitting source, including: a detection crystal having dimensions great enough such that regional differences in radiation response are generated in the detection crystal by radiation impinging on one or more surfaces of the detection crystal; and a plurality of detectors one or more of coupled to and disposed on a plurality of surfaces of the detection crystal operable for detecting the regional differences in radiation response generated in the detection crystal by the radiation impinging on the one or more surfaces of the detection crystal.

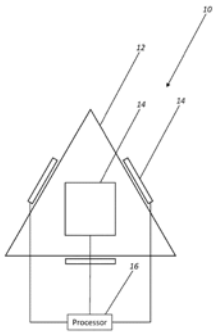

Physical Sciences

Physical and exact sciences, Protecting man and environment, Energy, Other industrial technologies, Measurements and standards

Other electronics related, Medical / health related, Energy, Industrial products

https://worldwide.espacenet.com/patent/search/family/063143899/publication/US10054697B1?q=US10054697B1

US

Radiation Area Monitor Device and Method

US9978469B1

20. 12. 2017

AISense d. o. o. [SI], Consolidated Nuclear Security LLC [US], Jožef Stefan Institute [SI]

Andrej Košiček, Jonathan S. Morrell, Toni Petrovič, Ashley C. Stowe, Matjaž Vencelj

Radiation Area Monitor Device and Method

This invention relates to a radiation area monitor device/method, utilizing: a radiation sensor having a directional radiation sensing capability; a rotation mechanism operable for selectively rotating the radiation sensor such that the directional radiation sensing capability selectively sweeps an area of interest; and a processor operable for analysing and storing a radiation fingerprint acquired by the radiation sensor as the directional radiation sensing capability selectively sweeps the area of interest. Optionally, the radiation sensor includes a gamma and/or neutron radiation sensor. The device/method selectively operates in: a first supervised mode during which a baseline radiation fingerprint is acquired by the radiation sensor; and a second unsupervised mode during which a subsequent radiation fingerprint is acquired by the radiation sensor, wherein the subsequent radiation fingerprint is compared to the baseline radiation fingerprint and, if a predetermined difference threshold is exceeded, an alert is issued.

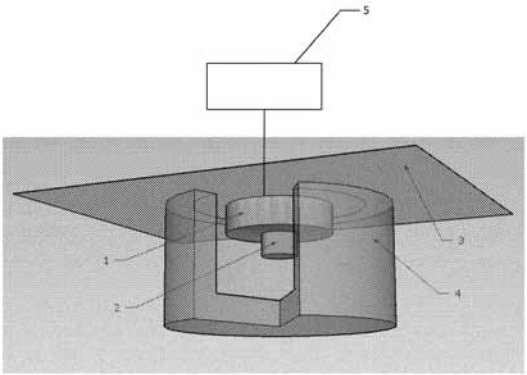

Physical Sciences

Physical and exact sciences, Protecting man and environment, Energy, Other industrial technologies, Measurements and standards

Other electronics related, Medical / health related, Energy, Industrial products

https://worldwide.espacenet.com/patent/search/family/061005543/publication/US9978469B1?q=US9978469B1

US

2016

Two Mode Electro-Optic Filter

WO2017117570A1

30. 12. 2016

Kimberly-Clark Worldwide Inc. [US]

Igor Muševič, Andrej Petelin

Two Mode Electro-Optic Filter

The present invention refers to methods and systems for an electro-optic filter that operates in two modes-a homogeneous mode and a heterogeneous mode. The homogeneous mode maintains a relatively homogeneous shading/attenuation range across specified viewing angles in both the vertical and horizontal directions. The heterogeneous mode provides for relatively homogeneous shading/attenuation range across specified viewing angles in the horizontal direction but allows for gradual and a more varying (e.g., wider) range of shading/attenuation changes across the specified viewing angles in the vertical direction, e.g., as compared to the horizontal direction.

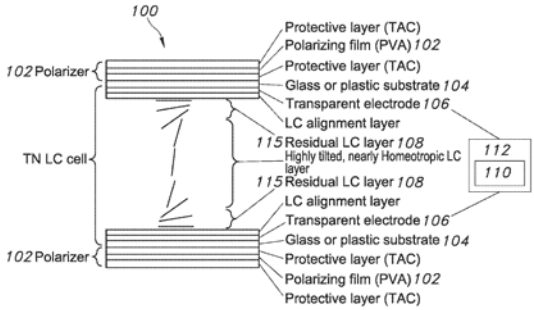

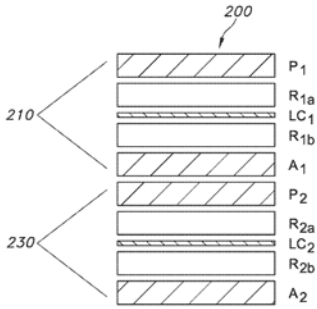

Physical Sciences

Physical and exact sciences, Measurements and standards

Industrial products, Other

https://worldwide.espacenet.com/patent/search/family/059225539/publication/WO2017117570A1?q=wo2017117570

WIPO

Extended patent application

US2019025624A1

30. 12. 2016

Kimberly-Clark Worldwide, Inc. [US]

Igor Muševič, Andrej Petelin

Two Mode Electro-Optic Filter

https://worldwide.espacenet.com/patent/search/family/059225539/publication/US2019025624A1?q=pn%3DUS2019025624A1

Extended patent application

CN108474889A

30. 12. 2016

Kimberly-Clark Worldwide Inc. [US]

Igor Muševič, Andrej Petelin

Two Mode Electro-Optic Filter

https://worldwide.espacenet.com/patent/search/family/059225539/publication/CN108474889A?q=pn%3DCN108474889A

Extended patent application

EP3397996A4

30. 12. 2016

Kimberly-Clark Worldwide Inc. [US]

Igor Muševič, Andrej Petelin

Two Mode Electro-Optic Filter

https://worldwide.espacenet.com/patent/search/family/059225539/publication/EP3397996A4?q=EP3397996A4

Extended patent application

CA3008288A1

30. 12. 2016

Kimberly-Clark Worldwide Inc. [US]

Igor Muševič, Andrej Petelin

Two Mode Electro-Optic Filter

https://worldwide.espacenet.com/patent/search/family/059225539/publication/CA3008288A1?q=pn%3DCA3008288A1

Extended patent application

AU2016381367A1

30. 12. 2016

Kimberly-Clark Worldwide Inc. [US]

Igor Muševič, Andrej Petelin

Two Mode Electro-Optic Filter

https://worldwide.espacenet.com/patent/search/family/059225539/publication/AU2016381367A1?q=pn%3DAU2016381367A1

Extended patent application

BR112018011673A2

30. 12. 2016

Kimberly-Clark Worldwide Inc. [US]

Igor Muševič, Andrej Petelin

Dispositivo de filtro de dois modos, e, método.

https://worldwide.espacenet.com/patent/search/family/059225539/publication/BR112018011673A2?q=pn%3DBR112018011673A2

2015

Device and Method for Producing UV Radiation

CZ2015815A

16. 11. 2015

Tomas Bata University in Zlín [CZ], Jožef Stefan Institute [SI]

Marián Lehocký, Petr Stloukal , Vladimír Sedlařík, Petr Humpolíček, Alenka Vesel, Miran Mozetič, Rok Zaplotnik, Gregor Primc

Device and Method for Producing UV Radiation

The invention relates to a device for producing UV radiation, providing preferably UVA and UVB radiation with negligible amount of radiation in the visible or near IR range. The device comprises at least one luminous tube 1 which is closed and whose walls are transparent for UVA and UVB radiation. Said luminous tube contains stable amount of sulphur oxide (SO) molecules, and simultaneously a stable amount of free electrons. The method for producing such UV radiation using the device according to the invention lies in that the luminous tube is filled by sulphur oxide (SO) molecules with stable amount of free electrons, wherein the SO molecules are supplied and drained into and out from the luminous tube in such a way that the pressure inside the luminous tube as well as the amount of free electrons remains constant.

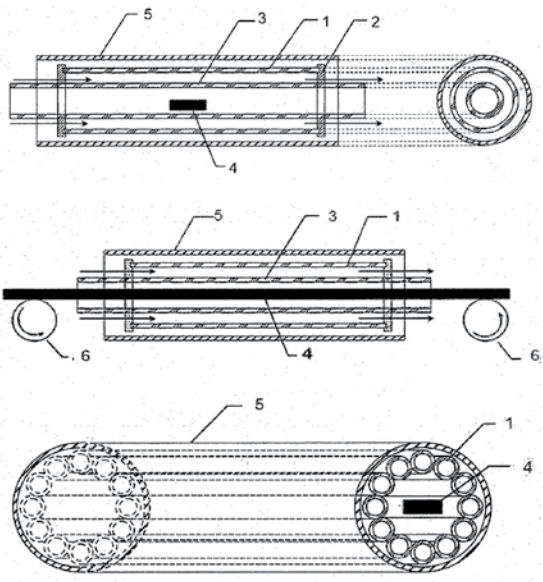

Physical Sciences

Physical and exact sciences, Other industrial technologies

Industrial products, Other

https://worldwide.espacenet.com/patent/search/family/057209135/publication/CZ2015815A3?q=EP3168860A1%20

CZ

Extended patent application

EP3168860B1

19. 10. 2016

Tomas Bata University in Zlín [CZ], Jožef Stefan Institute [SI]

Marián Lehocký, Petr Stloukal , Vladimír Sedlařík, Petr Humpolíček, Alenka Vesel, Miran Mozetič, Rok Zaplotnik, Gregor Primc

Device and Method for Producing UV Radiation

https://worldwide.espacenet.com/patent/search/family/057209135/publication/EP3168860B1?q=EP3168860B1

Extended patent application

ES2719141T3

19. 10. 2016

Tomas Bata University in Zlín [CZ], Jožef Stefan Institute [SI]

Marián Lehocký, Petr Stloukal , Vladimír Sedlařík, Petr Humpolíček, Alenka Vesel, Miran Mozetič, Rok Zaplotnik, Gregor Primc

Dispositivo y método de producción de radiación

https://worldwide.espacenet.com/patent/search/family/057209135/publication/ES2719141T3?q=%20ES2719141T3

Extended patent application

SI3168860T1

19. 10. 2016

Tomas Bata University in Zlín [CZ], Jožef Stefan Institute [SI]

Marián Lehocký, Petr Stloukal , Vladimír Sedlařík, Petr Humpolíček, Alenka Vesel, Miran Mozetič, Rok Zaplotnik, Gregor Primc

Naprava in metoda za proizvodnjo UV sevanja

https://worldwide.espacenet.com/patent/search/family/057209135/publication/SI3168860T1?q=%20SI3168860T1

Cleaning System and Method for Operating the Cleaning System

EP3127502B1

3. 8. 2015

Fotona d. o. o. [SI]

Peter Gregorčič, Matija Jezeršek, Matjaž Lukač, Nejc Lukač

Cleaning System and Method for Operating the Cleaning System

The invention relates to a cleaning system being configured for cleaning, including fragmentation, debridement, material removal, irrigation, disinfection and decontamination, of cavities (2) filled with a liquid (3). The cleaning system comprises an electromagnetic radiation system and the liquid (3). A treatment hand piece (7) and its exit component (8) are configured to irradiate the liquid (3) within the cavity (2) with the radiation beam, wherein a wavelength of the radiation beam is chosen for signifi-

cant absorption of the radiation beam in the liquid (3). The electromagnetic radiation system is adapted to generate a first vapour bubble (18) within the liquid (3) by means of a corresponding first pulse (pa) and a second vapour bubble (18') within the liquid (3) by means of a corresponding second pulse (pb) at a location different to the location where the first vapour bubble (18) is present at the time of generating the second vapour bubble (18'). The electromagnetic radiation system further comprises a feedback system (9) to determine a bubble oscillation intensity. Adjusting means (10) are provided for adjusting the pulse repetition time (Tp) as a function of the determined bubble oscillation intensity. The pulse repetition time (Tp) is adjusted such, that the onset time (t0b) of the second vapour bubble (18') is within the first contraction phase of the first vapour bubble (18), when the first vapour bubble (18) has contracted from its maximal Volume (Vmax) to a size in a range from about 0.7 to about 0.1 of the maximal Volume (Vmax).

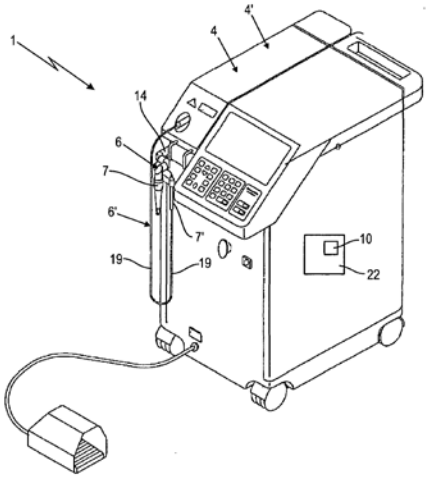

Physical Sciences

Other industrial technologies, Biological sciences

Medical / health related, Other electronics related

https://worldwide.espacenet.com/patent/search/family/053776282/publication/EP3127502B1?q=%20EP3127502B1

EPO

Extended patent application

PL3127502T3

3. 8. 2015

Fotona d. o. o. [SI]

Peter Gregorčič, Matija Jezeršek, Matjaž Lukač, Nejc Lukač

Cleaning System

https://worldwide.espacenet.com/patent/search/family/053776282/publication/PL3127502T3?q=PL3127502T3

Extended patent application

US10518299B2

3. 8. 2016

Fotona d. o. o. [SI]

Peter Gregorčič, Matija Jezeršek, Matjaž Lukač, Nejc Lukač

Cleaning System and Method for Operating the Cleaning System

https://worldwide.espacenet.com/patent/search/family/053776282/publication/US10518299B2?q=%20US10518299B2

Polymer Dispersed Liquid Crystal Elastomers (PDLCE)

EP3119855B1

17. 3. 2015

Jožef Stefan Institute [SI]

Andraž Rešetič, Jerneja Milavec, Blaž Zupančič, Boštjan Zalar

Polymer Dispersed Liquid Crystal Elastomers (PDLCE)

This invention presents a method of producing liquid crystal elastomer (LCE) based components comprises the steps of (i) providing or creating micro-sized or nano-sized LCE particles, (ii) dispersing the particles in an uncured liquid polymer, (iii) aligning the nematic directors of the particles and, (iv) shaping and curing the matrix/particles mixture. The composite material formed by this method is a polymer dispersed liquid crystal elastomer (PDLCE) with custom-tailored properties which can be shaped into arbitrary forms. Also shown is liquid crystal elastomer based component.

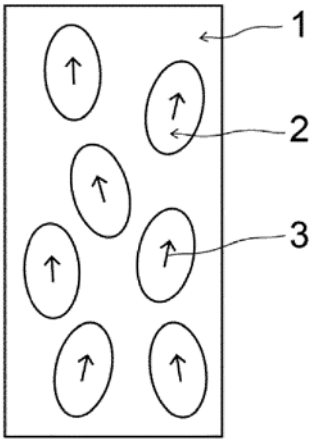

Physical Sciences

Industrial manufacturing, material and transport , Physical and exact sciences

Other electronics related, Industrial products

https://worldwide.espacenet.com/patent/search/family/050634906/publication/EP3119855B1?q=%20EP3119855B1

EPO

Extended patent application

SI3119855T1

17. 3. 2015

Jožef Stefan Institute [SI]

Andraž Rešetič, Jerneja Milavec, Blaž Zupančič, Boštjan Zalar

Polimerno dispergirani tekočekristalni elastomeri (PDTKE) [SL]

https://worldwide.espacenet.com/patent/search/family/050634906/publication/SI24658A?q=SI24658A

Extended patent application

GB2524251A

17. 3. 2014

Jožef Stefan Institute

Andraž Rešetič, Jernej Milavec, Blaž Zupančič, Boštjan Zalar

Polymer dispersed liquid crystal elastomers (PDLCE)

https://worldwide.espacenet.com/patent/search/family/050634906/publication/GB2524251A?q=pn%3DGB2524251A

Extended patent application

WO2015140149A1

17. 3. 2015

Jožef Stefan Institute [SI]

Andraž Rešetič, Jerneja Milavec, Blaž Zupančič, Boštjan Zalar

Polymer Dispersed Liquid Crystal Elastomers (PDLCE)

https://worldwide.espacenet.com/patent/search/family/050634906/publication/WO2015140149A1?q=WO2015140149A1

Extended patent application

CN106103653B

17. 3. 2015

Jožef Stefan Institute [SI]

Andraž Rešetič, Jerneja Milavec, Blaž Zupančič, Boštjan Zalar

Polymer Dispersed Liquid Crystal Elastomers (PDLCE)

https://worldwide.espacenet.com/patent/search/family/050634906/publication/CN106103653B?q=CN106103653B

Extended patent application

KR20160133522A

17. 3. 2015

Jožef Stefan Institute [SI]

Andraž Rešetič, Jerneja Milavec, Blaž Zupančič, Boštjan Zalar

Polymer Dispersed Liquid Crystal Elastomers (PDLCE)

https://worldwide.espacenet.com/patent/search/family/050634906/publication/KR20160133522A?q=pn%3DKR20160133522A

Extended patent application

US9969847B2

17. 3. 2015

Jožef Stefan Institute [SI]

Andraž Rešetič, Jerneja Milavec, Blaž Zupančič, Boštjan Zalar

Polymer Dispersed Liquid Crystal Elastomers (PDLCE)

https://worldwide.espacenet.com/patent/search/family/050634906/publication/US9969847B2?q=%20US9969847B2

Extended patent application

JP6526699B2

17. 3. 2015

Jožef Stefan Institute [SI]

Andraž Rešetič, Jerneja Milavec, Blaž Zupančič, Boštjan Zalar

Polymer Dispersed Liquid Crystal Elastomers (PDLCE)

https://worldwide.espacenet.com/patent/search/family/050634906/publication/JP6526699B2?q=JP6526699B2

2014

Method and Device for Impinging Mineral Melt Stream Manipulation

WO2016076802A1

13. 11. 2014

Izoteh d. o. o. [SI]

Denis Arčon, Anton Potočnik

Method and Device for Impinging Mineral Melt Stream Manipulation

Method and device for impinging mineral melt stream manipulation solves above referenced technical problem by actively controlling melt stream behaviour by electromagnetic forces acting on the melt flow in the vicinity of spinning cylinders. The present invention overcomes the above described technical problem by actively controlling the melt flow and tailoring the shape of the melt stream. The present invention employs both static and alternating electromagnetic fields which exert electromagnetic forces on the mineral melt stream. The electromagnetic forces can be used to control the position of the contact point between mineral melt stream and spinning cylinders which can fluctuate due to inhomogeneous melt. In addition, the melt stream can be flattened in order to increase the contact surface between the mineral melt and the spinning cylinders. Both methods are necessary to keep a constant production yield of mineral wool at the maximum level.

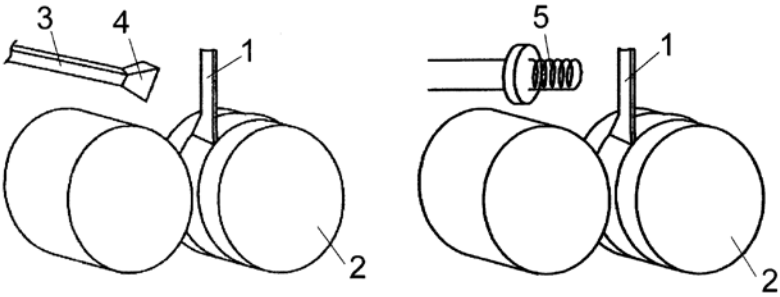

Physical Sciences

Industrial manufacturing, material and transport, Physical and exact sciences, Other industrial technologies

Industrial products, Other

https://worldwide.espacenet.com/patent/search/family/052450549/publication/WO2016076802A1?q=wo2016076802

WIPO

Process and a Device for Improvement of Operation of Silicon Photomultipliers in The Regime of Piled-Up Pulses of Light

SI24863A

17. 10. 2014

Jožef Stefan Institute [SI], Beyond Semiconductor d. o. o. [SI]

Matjaž Vencelj, Miha Cankar, Andrej Likar

Postopek za izboljšanje delovanja silicijevih fotopomnoževalk v režimu nakopičenih bliskov in naprava [SL], Process and a Device for Improvement of Operation of Silicon Photomultipliers in The Regime of Piled-Up Pulses of Light [EN]

The present invention belongs to the field of silicon photomultipliers based sensor systems, more precisely to the field of processes for extending the usability of sensor systems with silicon photomultipliers in the regime of piled-up pulses of light and devices, which are based on these processes. The extension of the silicon photomultiplier performance into the piled-up regime is made by adding an intermediate step into the measurement of the incident light intensity. This step takes into account the properties of the sensor and dynamically compensates for the gain loss due to temporary inhibition of parts of sensor. On the basis of this estimation the system reports numerically modified estimations for brightness of flashes.

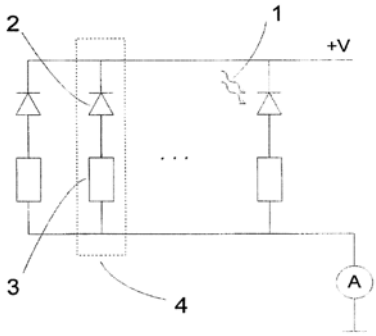

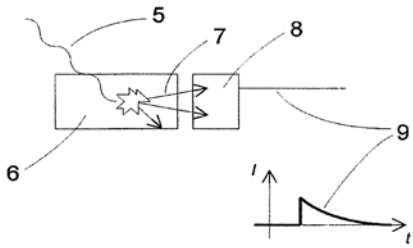

Physical Sciences

Physical and exact sciences

Communications, Computer related, Other electronics related

https://worldwide.espacenet.com/patent/search/family/055070113/publication/SI24863A?q=%20SI24863A

UIL RS

Extended patent application

WO2016060622A1

16. 10. 2015

Jožef Stefan Institute [SI], Beyond Semiconductor d. o. o. [SI]

Matjaž Vencelj, Miha Cankar, Andrej Likar

Device and Method for Producing UV Radiation

https://worldwide.espacenet.com/patent/search/family/055070113/publication/WO2016060622A1?q=WO2016060622A1

A Method of Colouring Titanium or Titanium Alloy

GB2530805A

3. 10. 2014

Jožef Stefan Institute [SI]

Gregor Filipič, Kristina Eleršič, Darij Kreuh, Janez Kovač, Uroš Cvelbar, Miran Mozetič

A Method of Colouring Titanium or Titanium Alloy

A method is described whereby titanium or titanium alloys are coloured in different colours. A processing chamber, such as a quartz tube 1, may be used which is sealed with two gate valves 2,3. The work pieces are arranged in the processing chamber on a sample holder 4. A vacuum is then applied to the chamber 1. Oxygen is then passed into the processing chamber and a magnetic field applied. The method utilises an oscillating magnetic field in a low pressure oxygen-containing atmosphere to initiate titanium oxidation. The oxide layer so produced is thick enough to obtain chosen colour through interferometric effects. Colours range from yellow with the thinnest oxide layer, through to purple, blue, gold, violet, green to grey. No deposition of coatings or anodic oxidation occurs. This can be used for various applications, including: decorative purposes, labelling, protecting the surfaces made of titanium or titanium alloys, and increasing the biocompatibility.

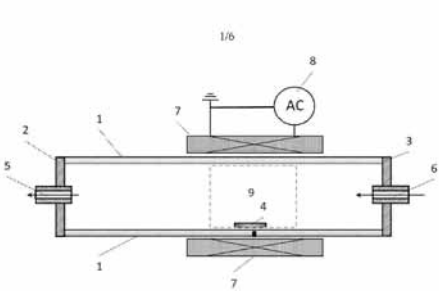

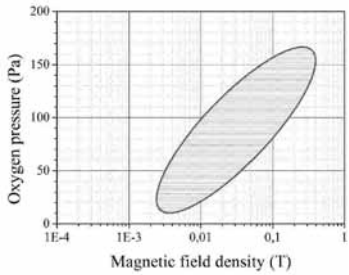

Physical Sciences

Physical and exact sciences

Medical/ health related, Industrial products

https://worldwide.espacenet.com/patent/search/family/051946815/publication/GB2530805A?q=GB2530805A

GB

Extended patent application

SI24851A

16. 10. 2014

Jožef Stefan Institute [SI]

Gregor Filipič, Kristina Eleršič, Darij Kreuh, Janez Kovač, Uroš Cvelbar, Miran Mozetič

Metoda za barvanje titana in titanovih zlitin

https://worldwide.espacenet.com/patent/search/family/051946815/publication/SI24851A?q=SI24851

Angle-sensitive Gamma Camera with a Rotary Obstruction

GB2530574A

29. 9. 2014

Jožef Stefan Institute [SI]

Larisa Hosnar, Matjaž Vencelj, Klemen Bučar, Janez Burger

Angle-sensitive Gamma Camera with a Rotary Obstruction

The present invention provides an angle-sensitive camera for detecting radiation, including a stationary detector (1) and a set of simultaneously rotating gamma-ray absorbent obstructions or windows in a cylindrical obstruction element (3), rotating about an axis passing through the detector. Detection of the radiation incident from a given direction is hindered twice per device revolution. There are at least two obstructions in fixed positions at angles between 40 and 50 degrees sweeping through

a spherical or cylindrical surface surrounding the detector. The azimuthal and elevation angle of the radiation direction translate uniquely into the exact times of detection hindrance during each revolution.

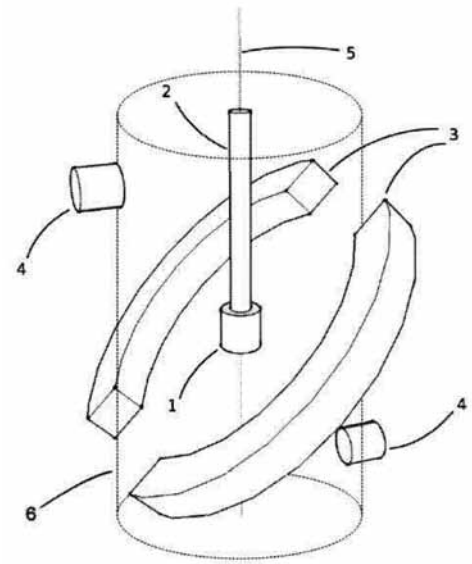

Physical Sciences

Physical and exact sciences, Electronics, IT and telecoms

Other electronics related, Industrial products

https://worldwide.espacenet.com/patent/search/family/051901277/publication/GB2530574A?q=GB2530574A

GB

Extended patent application

SI24818A

16. 10. 2014

Jožef Stefan Institute [SI]

Matjaž Vencelj, Larisa Hosnar, Klemen Bučar, Janez Burger

Kotno občutljiva kamera gama z rotacijsko obstrukcijo

https://worldwide.espacenet.com/patent/search/family/051901277/publication/SI24818A?q=SI24818A

Extended patent application

WO2016050631A1

25. 09. 2015

Jozef Stefan Institute

Matjaž Vencelj, Larisa Hosnar, Klemen Bučar, Janez Burger

Angle-sensitive Gamma Camera with a Rotary Obstruction

https://worldwide.espacenet.com/patent/search?q=pn%3DWO2016050631A1

Method for Improving the Comparative Tracking Index of Polymer Composites

IN2014042394

31. 08. 2014

Sabu Thomas [IN], Jožef Stefan Institute [SI]

Harinarayanan Puliyalil, Uroš Cvelbar, Miran Mozetič, Sabu Thomas

Method for Improving the Comparative Tracking Index of Polymer Composites (original title), Increasing comparative tracking index of electrical devices, used to e.g. modify electronic device, comprises e.g. inserting the electrical devices into processing chamber, and evacuating the processing chamber down to specified pressure (DWPI Title)

The present invention increases comparative tracking index (CTI) of electrical devices comprising of at least two electrodes electrically insulated with composite material containing glass particles, preferably glass fibres and metallic fillers embedded in polymer matrix, comprises e.g. (a) inserting the electrical devices into a processing chamber, (b) evacuating the processing chamber down to the pressure of 100, preferably 1 Pa, and (c) exposing the

electrical devices in the processing chamber to oxygen ions of kinetic energy of 5-80 eV, preferably 10-30 eV. Use: The method is useful for: increasing CTI of electrical devices; modifying an electronic device, where the electronic device comprises a product that comprises insulators, rotors or commutators (all claimed); and improving the CTI performances of the polymer matrix composites by surface modification by means of oxygen plasma treatment. Advantage: The method: provides the CTI without requiring the need of additional polymer (halogenated polymers, phosphorus or nitrogen containing polymers), hence eco-friendly; utilizes the glass fibers embedded in polymer matrix without significant distortion of the bulk properties of insulating material; and utilizes the oxygen ions that do not only cause preferential heating of the surface of composite material containing glass particles, preferably glass fibres, embedded in polymer matrix, but interacts chemically with hydrogenated carbon material from which the polymer is obtained.

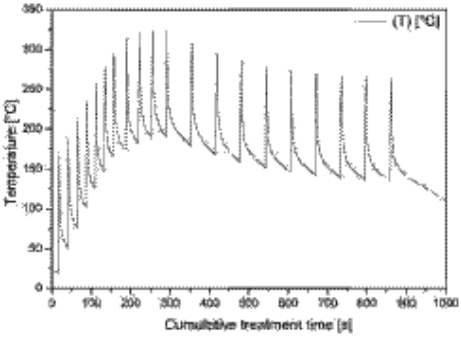

Physical Sciences

Industrial manufacturing, material and transport , Physical and exact sciences

Other electronics related products, Industrial products

http://www.derwentinnovation.com/tip-innovation/recordView.do?pager.offset=1&recordCount=1&parentIds=null&totalRecords=1&totalFamilyRec=1&fromRecordView=false&datasource=T3&category=PAT&selRecord=1&resultsetId=164339947&databaseIds=PATENT&idType=uid&recordKeys=IN201404239I420160701&patentNumber=IN201404239I4&strategyId=&fromExternalLink=false&bObjId=null&flatResult=false&isCopy=false&fromLocation=&recViewType=STANDARD&standardFieldLabel=Abstract&&fromWorkFile=false&fromMarkedList=false&isFileHistoryAllowed=true#Abstract

India

Switchable Macroscopic Quantum State Devices and Methods for Their Operation

SI24776A

16. 10. 2014

Jožef Stefan Institute [SI]

Igor Vaskivskyi, Dragan D. Mihailović, Ian A. Mihailović

Preklopni elementi na osnovi makroskopskih kvantnih stanj in metode njihovega delovanja [SL], Switchable Macroscopic Quantum State Devices and Methods for Their Operation [EN]

The electrical switching between macroscopic quantum states in 1T-TaS2 is presented according to the principle observed at fast laser switches in the same material. It is based on the findings that switching between macroscopic quantum states with sufficient differences in electrical resistance is surprisingly possible with the introduction of electric current. Switching devices based on macroscopic quantum states have a first and a second electrode and an active material, the active material has an optional and stable first and second macroscopic quantum state with a first and a second value of electrical resistance at the same temperature. Below a temperature of 180 K, the active material is in a commensurable (C) insulator state, from which it passes into a hidden quantum state (H - hidden) with the supplied electric current (writing W - write), which leads to a change of states and electrical resistance. The conditional reading step (R - read) can determine the resistance of the active material, and the erasing step (E - erase) returns the active material back to the first or second quantum state with a higher resistance with a longer current shock.

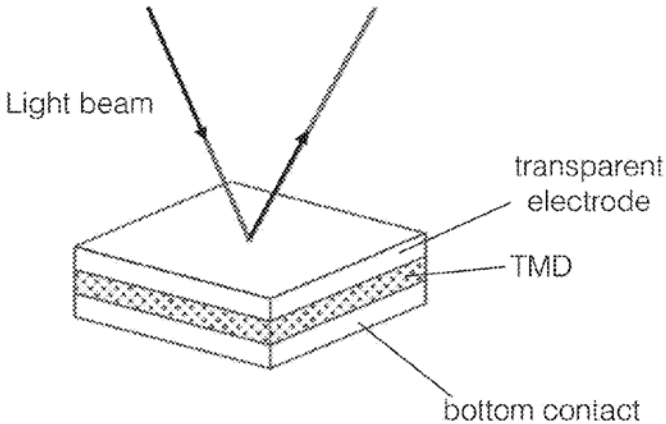

Physical Sciences

Physical and exact sciences

Communications, Computer related, Other electronics related

https://worldwide.espacenet.com/patent/search/family/051494871/publication/SI24776A?q=SI24776A

UIL RS

Extended patent application

US9818479B2

17. 7. 2015

Jožef Stefan Institute [SI]

Igor Vaskivskyi, Dragan D. Mihailović, Ian A. Mihailović

Switchable Macroscopic Quantum State Devices and Methods for Their Operation

https://worldwide.espacenet.com/patent/search/family/051494871/publication/US9818479B2?q=US9818479B2

Method and Device for Detection and Measuring the Density of Neutral Atoms of Hydrogen, Oxygen or Nitrogen

SI24727A

22. 05. 2014

Jožef Stefan Institute [SI]

Gregor Primc, Miran Mozetič, Uroš Cvelbar, Alenka Vesel

Postopek in naprava za detekcijo in merjenje gostote nevtralnih atomov vodika, kisika ali dušika [SL], Method and Device for Detection and Measuring the Density of Neutral Atoms of Hydrogen, Oxygen or Nitrogen [EN]

This invention presents a method for detecting neutral hydrogen, oxygen or nitrogen atoms in an unbalanced gas state, as well as for determining the densities of said neutral atoms in said gas state. The method takes advantage of measuring the power of a remote heating source, often an infrared laser, which is needed to maintain a constant temperature of the catalyst, which is placed in an unbalanced state of the gas. Non-equilibrium gas states include non-equilibrium gas plasma and early and late electrification.

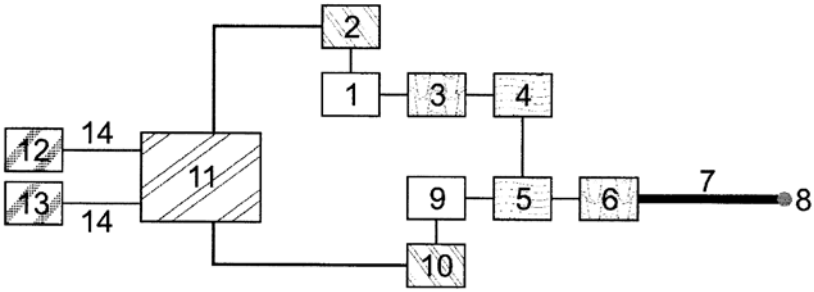

Physical Sciences

Physical and exact sciences, Measurements and standards

Industrial products, medical / health related

https://worldwide.espacenet.com/patent/search/family/051659606/publication/SI24727A?q=SI24727A

UIL RS

Extended patent application

WO2015176733A1

30. 09. 2014

Jožef Stefan Institute [SI]

Gregor Primc, Miran Mozetič, Uroš Cvelbar, Alenka Vesel

Method and Device for Detection and Measuring the Density of Neutral Atoms of Hydrogen, Oxygen or Nitrogen

https://worldwide.espacenet.com/patent/search/family/051659606/publication/WO2015176733A1?q=WO2015176733A1

Extended patent application

EP3146327B1

30. 09. 2014

Jožef Stefan Institute [SI]

Gregor Primc, Miran Mozetič, Uroš Cvelbar, Alenka Vesel

Method and Device for Detection and Measuring the Density of Neutral Atoms of Hydrogen, Oxygen or Nitrogen

https://worldwide.espacenet.com/patent/search/family/051659606/publication/EP3146327B1?q=EP3146327B1

Method and Apparatus for the Analysis of Materials

EP2937680B1

24. 4. 2015

Aerosol d. o. o. [SI]

Luka Drinovec, Anthony Hansen, Griša Močnik

Method and Apparatus for the Analysis of Materials

The object of the invention is an apparatus and a method for measuring constituents in a sample. The apparatus includes two or more similar analysers (112, 114), with the output of the analysers combined to provide improved measurements. The apparatus may be, for example, a differential photometric analyser, such as the AETHALOMETER ® . The apparatus includes filters (121, 123) for accumulating constituents in a sample flowing through volumes (113, 115) respectively, sensors (113, 115) for measuring light absorption within the filters, and a processor

(201) programmed to accept an instrument constant determined at low filter loadings and use the constant to compensate for non-linear instrument responses. A method is also presented for conditioning the filters before use.

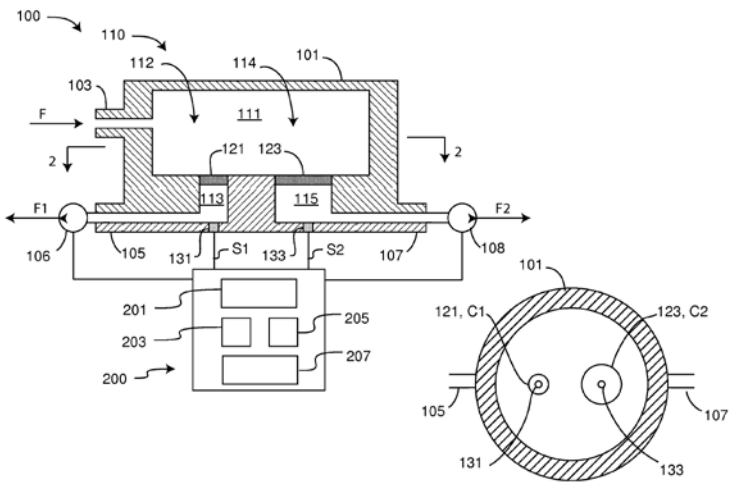

Physical Sciences

Physical and exact sciences, Measurements and standards, Protecting man and environment

Other, Industrial products

https://worldwide.espacenet.com/patent/search/family/053002583/publication/EP2937680B1?q=EP2937680B1

EPO

Extended patent application

US9671324B2

24. 4. 2015

Aerosol d. o. o. [SI]

Luka Drinovec, Anthony Hansen, Griša Močnik

Method and Apparatus for the Analysis of Materials

https://worldwide.espacenet.com/patent/search/family/053002583/publication/US9671324B2?q=%20US9671324B2

Laser System and Method for Operating the Laser System

EP2907471A1

13. 2. 2014

Fotona d. d. [SI]

Marko Kazič, Matjaž Lukač

Laser System and Method for Operating the Laser System

The invention relates to a Laser system (1) for irrigation, including debriding, cleaning and decontamination, of anatomical cavities (2) filled with a liquid (3). The laser system (1) comprises a laser source (4) for generating a laser beam (5), and an optical delivery system (6) for the laser beam (5), wherein the delivery system (6) includes a treatment handpiece (7) and an exit component (8). The treatment handpiece (7) and the exit component (8) are configured to irrigate the anatomical cavity (2). A wavelength of the laser beam (5) is in a range from above 0.4 μm to 11.0 μm inclusive. The laser system (1) is adapted to be operated in pulsed operation with pulse sets (21) containing at least two and maximally twenty individual pulses (p) of a temporally limited pulse length (t p), wherein a temporal separation (t s) between the pulse sets is ‰ 20 ms, and wherein the individual pulses (p) follow one another with a temporal pulse period (T P) within a range of 50 μs, inclusive, to 1000 μs, inclusive. The laser system (1) further comprises a feedback system (9) to determine a bubble oscillation intensity of at least one vapor bubble (18) generated within the liquid (3) when irradiated with the laser beam (5). Adjusting means (10) are provided for adjusting the temporal pulse period (T P) to achieve at least approximately a bubble oscillation intensity maximum.

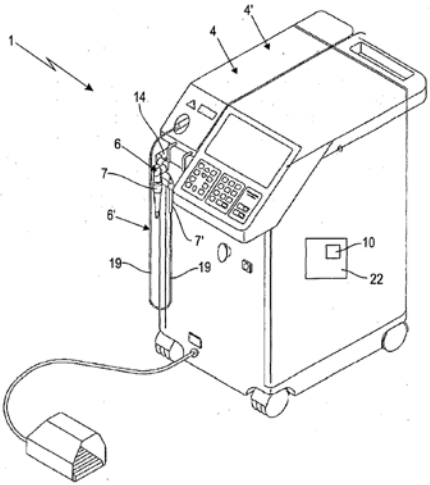

Physical Sciences

Physical and exact sciences

Medical / health related, Other

https://worldwide.espacenet.com/patent/search/family/050115673/publication/EP2907471A1?q=%20EP14000529A

EPO

Extended patent application

US9572632B2

13. 2. 2015

Fotona d. d. [SI]

Marko Kazič, Matjaž Lukač

Laser System and Method for Operating the Laser System

https://worldwide.espacenet.com/patent/search/family/050115673/publication/US9572632B2?q=US9572632B2

A Method and a Device for Indirect Characterization of the Damage to the Pool for Spent Nuclear Fuel

GB2530969B

4. 6. 2014

Jožef Stefan Institute [SI]

Andrej Prošek, Ivo Klenjak, Iztok Tiselj, Leon Cizelj, Ljubo Fabjan, Marko Matkovič, Matjaž Leskovar

Metoda in naprava za posredno karakterizacijo poškodbe bazena za izrabljeno jedrsko gorivo [SL], A Method and a Device for Indirect Characterization of the Damage to the Pool for Spent Nuclear Fuel [EN]

This invention relates to a method and device for indirect characterization of damage to the spent nuclear fuel pool envelope enables, on the basis of monitoring measurements of coolant leakage from the system, the performance of indirect characterization of damage to the envelope and prediction of the development of an emergency event; thus, a forecast of the development of the coolant level in the spent fuel pool and a forecast of the development of the dose rate in the vicinity of said pool. Additional parameters such as inflow and temperature of fresh coolant, coolant temperature in the pool, dose rate near said pool and some others are also taken into account in the calculation of damage characterization and emergency development forecast including evacuation extreme weather forecast.

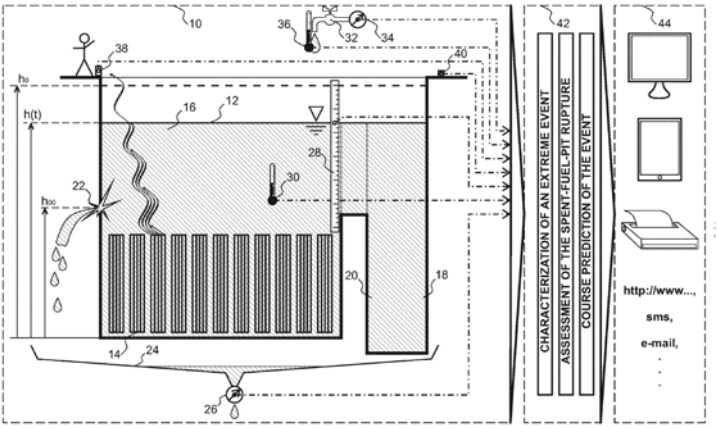

Physical Sciences

Physical and exact sciences, Protecting man and environment

Energy, Industrial products, Other

https://worldwide.espacenet.com/patent/search/family/051214696/publication/GB2530969B?q=GB2530969B

UIL RS

Extended patent application

SI24756A

16. 10. 2014

Jožef Stefan Institute [SI]

Andrej Prošek, Ivo Klenjak, Iztok Tiselj, Leon Cizelj, Ljubo Fabjan, Marko Matkovič, Matjaž Leskovar

Method and Apparatus for Assessing the State of a Spent-Fuel Facility

https://worldwide.espacenet.com/patent/search/family/051214696/publication/SI24756A?q=SI24756A

Micro/Nano Region Liquid Crystal Alignment Method and System Thereof Based On Laser Direct Writing

CN103995394B

19. 3. 2014

Nankai University [CN]

Wei Cui, Irena Drevenšek Olenik, Yongfa Kong, Wei Li, Bin Shi, Zhenhua Wang, Qiang Wu, Jingjun Xu, Xinzheng Zhang

Micro/Nano Region Liquid Crystal Alignment Method and System Thereof Based On Laser Direct Writing

The present invention discloses a method for orientation of liquid crystals in a micro/nano region on the basis of laser direct writing and a

system thereof. According to the method, a laser direct writing system is employed to build a micro/nano structure; liquid crystal molecules in a micro/nano structural region perform self-orientation; the orientation of liquid crystals is generated by a fine structure on side walls of polymer strips which form the micro/nano structure; and the dimension of said micro/nano region varies from the micrometer magnitude to the nanometer magnitude exceeding the diffraction limit. The method and the system of the present invention are easy to operate, can realize self-orientation of the liquid crystals in the micro/nano regions without forming the orienting induction film on the substrate using mechanical or light induction means; the orientating direction can be adjusted and controlled in the micro/nano region, which is favourable for the miniaturization of the liquid crystal display devices and the orientation of the complicated three-dimensional liquid crystal structure. The method and the system can be widely popularized and used.

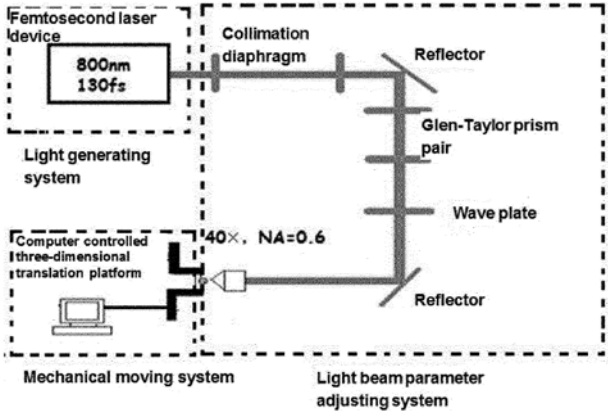

Physical Sciences

Physical and exact sciences

Computer related

EPO

Extended patent application

WO2015139353A1

22. 4. 2014

Nankai University [CN]

Wei Cui, Irena Drevenšek Olenik, Yongfa Kong, Wei Li, Bin Shi, Zhenhua Wang, Qiang Wu, Jingjun Xu, Xinzheng Zhang

Micro/Nano Region Liquid Crystal Alignment Method and System Thereof Based On Laser Direct Writing

https://worldwide.espacenet.com/patent/search/family/051309603/publication/WO2015139353A1?q=pn%3DWO2015139353A1

Extended patent application

SI2977815T1

22. 4. 2014

Nankai University [CN]

Wei Cui, Irena Drevenšek Olenik, Yongfa Kong, Wei Li, Bin Shi, Zhenhua Wang, Qiang Wu, Jingjun Xu, Xinzheng Zhang

Postopek poravnave tekočih kristalov v mikro/nano področju in sistem za to na podlagi neposrednega zapisovanja z laserjem [SL], Micro/nano region liquid crystal alignment method and system thereof based on laser direct writing [EN]

https://worldwide.espacenet.com/patent/search/family/051309603/publication/SI2977815T1?q=pn%3DSI2977815T1

Extended patent application

US10459294B2

22. 4. 2014

Nankai University [CN]

Wei Cui, Irena Drevenšek Olenik, Yongfa Kong, Wei Li, Bin Shi, Zhenhua Wang, Qiang Wu, Jingjun Xu, Xinzheng Zhang

Micro/Nano Region Liquid Crystal Alignment Method and System Thereof Based On Laser Direct Writing

https://worldwide.espacenet.com/patent/search/family/051309603/publication/US10459294B2?q=US10459294B2

Extended patent application

EP2977815B1

22. 4. 2014

Nankai University [CN]

Wei Cui, Yongfa Kong, Wei Li, Bin Shi, Zhenhua Wang, Qiang Wu, Jingjun Xu, Ruina Yi, Xinzheng Zhang

Micro/Nano Region Liquid Crystal Alignment Method and System Thereof Based On Laser Direct Writing

https://worldwide.espacenet.com/patent/search/family/051309603/publication/EP2977815B1?q=EP2977815B1

Method and Apparatus for Assessing the State of a Spent-fuel Facility

GB2530969B

4. 6. 2014

Jožef Stefan Institute [SI]

Marko Matkovič, Iztok Tiselj, Ivo Kljenak, Andrej Prošek, Matjaž Leskovar, Ljubo Fabjan, Leon Cizelj

Method and Apparatus for Assessing the State of a Spent-fuel Facility

This disclosure provides a system for assessing a state of a pool 12 for storing spent nuclear fuel rods or assemblies 14. The system allows a forecast to be made regarding the future development of the coolant (water) level elevation h(t) within the pond based on a measured leakage 22 of coolant 16 therefrom. A flow meter 26 measures the outflow of coolant from a dyke 24 arranged to collect coolant leaking from a rupture 22 in the spent-fuel facility 10. Additional parameters such as the coolant inflow rate, the temperature of the coolant inflow, the temperature of the bulk coolant, a radiation dose rate in the vicinity of the spent-fuel facility etc, may also be taken into account for assessing the location and size of the rupture, as well as for course prediction of the event

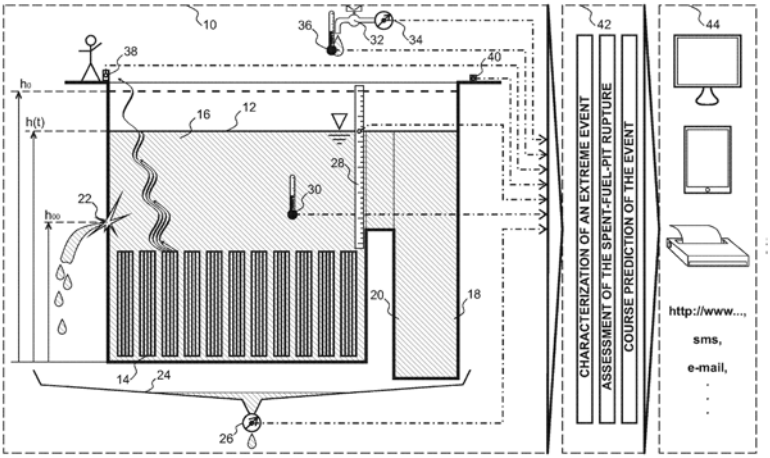

Physical Sciences

Industrial manufacturing, material and transport , Energy, Protecting man and environment

Industrial products

https://worldwide.espacenet.com/patent/search/family/051214696/publication/GB2530969B?q=GB2530969B

GB

Extended patent application

SI24756A

16. 10. 2014

Jožef Stefan Institute [SI]

Marko Matkovič, Iztok Tiselj, Ivo Kljenak, Andrej Prošek, Matjaž Leskovar, Ljubo Fabjan, Leon Cizelj

Metoda in naprava za posredno karakterizacijo poškodbe bazena za izrabljeno jedrsko gorivo

https://worldwide.espacenet.com/patent/search/family/051214696/publication/SI24756A?q=GB2530969B

2013

The Device for Determination of Depth of the Photon Intrusion into the Scintillation Material

SI24582A

16. 12. 2013

Instrumentation Technologies d. d. [SI], Jožef Stefan Institute [SI]

Matjaž Vencelj, Matej Lipoglavšek, Rok Uršič

Naprava za določanje globine vdora fotona v scintilacijski material [SL], The Device for Determination of Depth of the Photon Intrusion into the Scintillation Material [EN]

The present invention relates to a device for determining the depth of the penetration of the photon into the scintillation material, comprising a beam (1) of mutually parallel and optically isolated scintillation rods (2), wherein said receiving device (3) is provided with an optoelectric converter (4) with a plurality of surface oriented and light sensitive fields (5), and a signal processing system (6). According to the invention, it is proposed that a receiving device (3) is attached to the end of said beam (1) of the scintillation rods (2) which is away from the source of the photons, and with the end of said beam (1) scintillation rods (2) it faces the source of photons, an optically coupled surface-oriented light-emitting diode (7).

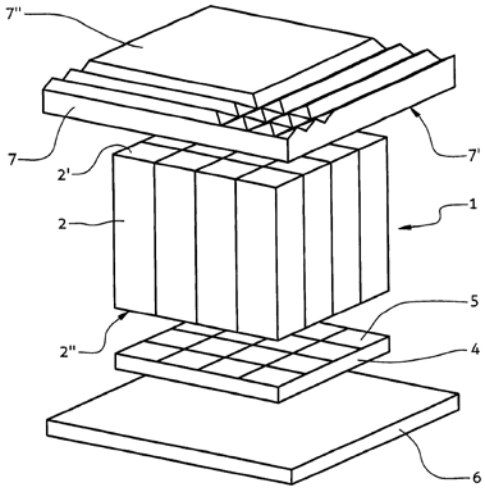

Physical Sciences

Physical and exact sciences

Other electronics related

https://worldwide.espacenet.com/patent/search/family/053443647/publication/SI24582A?q=SI24582%20

UIL RS

The Device for Measuring the Incident Direction of the Gamma Rays

SI24520A

23. 10. 2013

Toni Petrovič [SI]

Toni Petrovič

Naprava za merjenje vpadne smeri žarkov gama [SL], The Device for Measuring the Incident Direction of the Gamma Rays [EN]

This invention relates to a method and a concrete implementation of the device for measuring the incident direction of gamma rays are presented. The optimized shape of the lead crosshair, to which four scintillation detectors are attached, allows a uniform determination of the incident direction of gamma radiation solely on the basis of a comparison of the counting velocities from all four detectors. The approach is particularly suitable for use in a manual measuring instrument for field work in a scenario of searching for a lost source of radiation

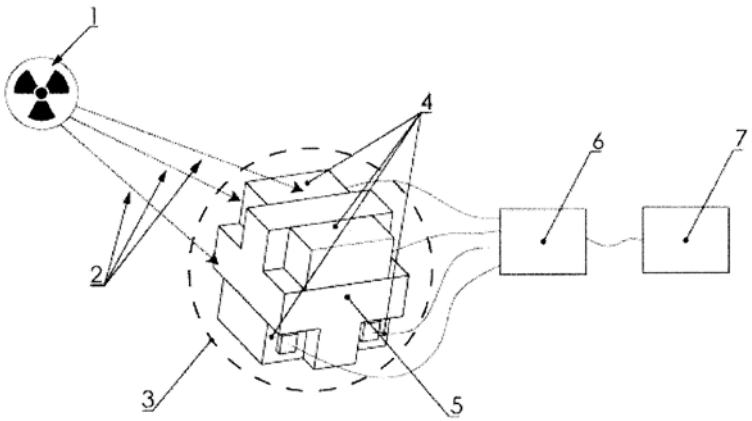

Physical Sciences

Physical and exact sciences, Measurements and standards, Protecting man and environment

Medical / health related, Industrial products, Other

https://worldwide.espacenet.com/patent/search/family/052998321/publication/SI24520A?q=si24520

UIL RS

System and Method for Gradient Assisted Non-Connected Automatic Region (GANAR) Analysis

US9355447B2

21. 8. 2013

Wisconsin Alumni Research Foundation [US]

Paulina E. Galavis, James Holden, Robert Jeraj, Bhudatt Paliwal

System and Method for Gradient Assisted Non-Connected Automatic Region (GANAR) Analysis

This disclosure provides a system and method for analyzing medical images of a subject includes acquiring the medical images of the subject and texture images. A computer system determines, using the medical images and the texture feature images, a plurality of segmentation surfaces by iteratively adjusting a relationship between a region growing algorithm that selects a region of interest (ROI) to determine a given segmentation surface and cost function for evaluating the given segmentation surface. The computer system generates a report using the plurality of segmentation surfaces indicating at least boundaries between anatomical structures with functional differences in the medical images.

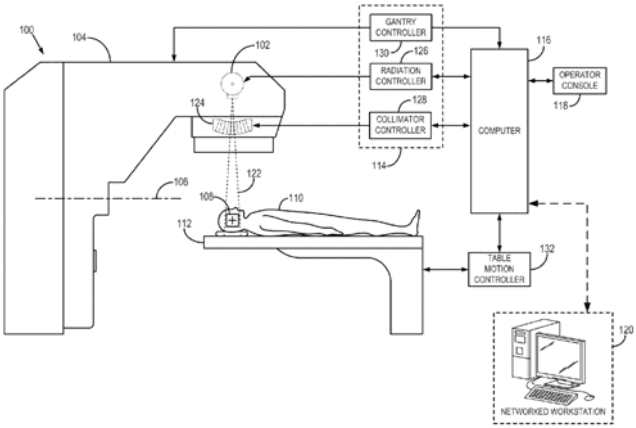

Physical Sciences

Physical and exact sciences, Electronics, IT and telecoms, Measurements and standards

Computer related, Medical / health related

https://worldwide.espacenet.com/patent/search/family/052480428/publication/US9355447B2?q=us9355447

US

A Laser System for the Treatment of Body Tissue

EP2818131B1

27. 6. 2013

Fotona d. d. [SI]

Marko Kazič, Matjaž Lukač

A Laser System for the Treatment of Body Tissue

The invention relates to a laser system (1) for the treatment of body tissue (2) on an inner circumferential tissue surface (3). The laser system (1) comprises a laser source (4) for the generation of a laser beam (5), a hand piece (6) with a treatment head (7), a control device (8) and a scanner (9). The treatment head (7) extends along a longitudinal axis

(10), wherein during operation an incoming beam section (11) of the laser beam (5) enters the treatment head (7) in the direction of the longitudinal axis (10). The treatment head (7) has a conically shaped output surface (12) being disposed around the longitudinal axis (10) and having an apex (13) facing away from an origin of the incoming beam section (11). The conically shaped output surface (12) has a maximum surface radius (R). The conically shaped output surface (12) further has a half opening angle (±) being adapted to provide total reflection of the incoming beam section (11) into a reflected beam section (14) within the treatment head (7) and to provide refraction of the reflected beam section (14) into an emerging beam section (15) emerging radially from the treatment head (7) through the output surface (12). The incoming beam section (11) has at the location of the output surface (12) a mean diameter (d) being ‰¤ the difference of the maximum surface radius (R) and a minimum scanning radius (R in). As part of the conically shaped output surface (12) a conically shaped scanning surface (38) is defined extending from the minimum scanning radius (R in) to the maximum surface radius (R), wherein the control device (8) is adapted to control the scanner (9) for scanning at least a portion of the conically shaped scanning surface (38) with the incoming beam section (11).

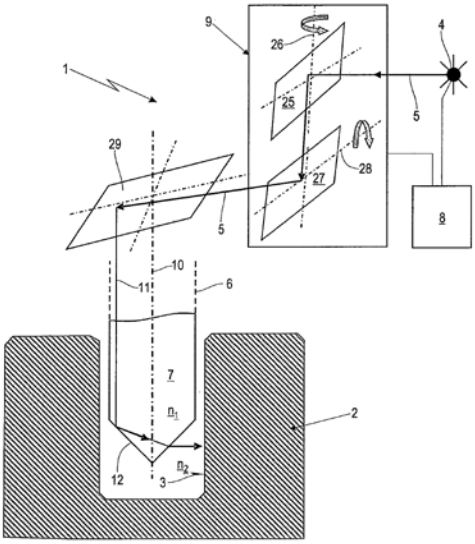

Physical Sciences

Physical and exact sciences, Biological sciences

Medical / health related

https://worldwide.espacenet.com/patent/search/family/048745598/publication/EP2818131B1?q=EP2818131B1

EPO

Extended patent application

KR20150001691A

27. 6. 2014

Fotona d. d. [SI]

Marko Kazič, Matjaž Lukač

A Laser System and Method for the Treatment of Body Tissue

https://worldwide.espacenet.com/patent/search/family/048745598/publication/KR20150001691A?q=%20KR20150001691A

Extended patent application

US9610125B2

27. 6. 2014

Fotona d. d. [SI]

Marko Kazič, Matjaž Lukač

A Laser System and Method for the Treatment of Body Tissue

https://worldwide.espacenet.com/patent/search/family/048745598/publication/US9610125B2?q=US9610125B2

System and Method for Evaluation of Disease Burden

US9161720B2

15. 3. 2013

Wisconsin Alumni Research Foundation [US]

Robert Jeraj, Glenn Liu

System and Method for Evaluation of Disease Burden

The object of the invention is a sensitive method of assessing treatment using molecular and anatomical imaging scans provides automatic tumor identification and quantification within anatomical zones based on treatment criteria. Absolute or comparative measures of tumors in pre- and/or post-scans are thereby isolated from other tissue to accentuate the progress of the treatment when multiple scattered disease lesions are present.

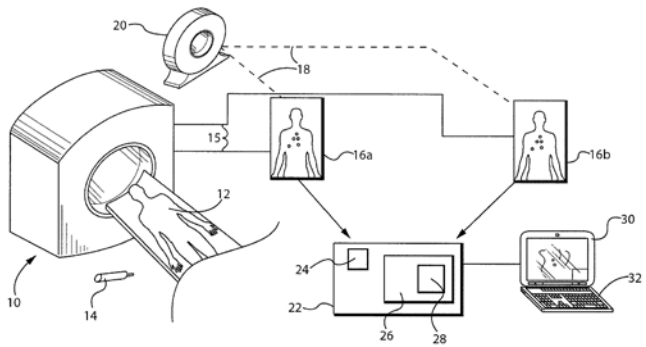

Physical Sciences

Physical and exact sciences, Biological sciences, Measurements and standards

Medical / health related

https://worldwide.espacenet.com/patent/search/family/051530452/publication/US9161720B2?q=US9161720B2

US

Method for Lightening or Eradicating Pigments in Human Skin

US9254174B2

28. 2. 2013

Fotona d. d. [SI]

Matjaž Lukač, Zdenko Vižintin

Method for Lightening or Eradicating Pigments in Human Skin

The present invention refers to lightening or eradicating pigments in human skin. A first conditioning laser optical energy having first optical parameters selected to obtain an ablative effect on the epidermal layer of human skin is provided. A target area of the human skin is conditioned by directing the first conditioning laser optical energy onto the target area and forming in an epidermal layer of the target area discrete pressure and gas release ducts across the target area. A second treatment laser optical energy is provided that has second optical parameters selected to obtain a lightening or eradicating effect on the pigments located within the human skin and to substantially avoid damaging the epidermal layer of the human skin. The second treatment laser optical energy is directed onto the target area subsequent to conditioning, and the pigments within the human skin are lightenmed or eradicated by the second treatment laser optical energy.

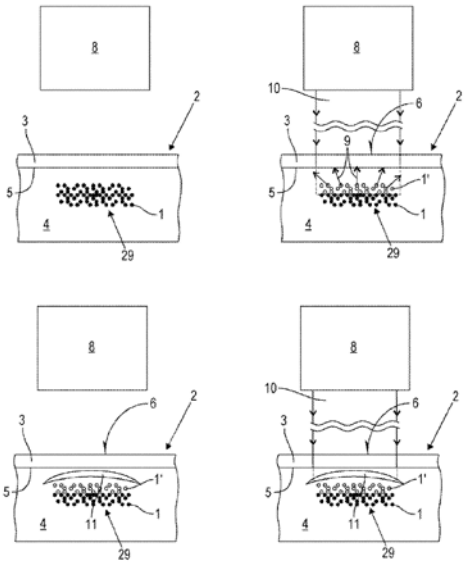

Physical Sciences

Physical and exact sciences, Biological sciences

Medical / health related

https://worldwide.espacenet.com/patent/search/family/051388873/publication/US9254174B2?q=US9254174B2

US

Method for Treatment of a Vascular Graft

WO2014112956A1

17. 1. 2013

Center of Excellence for Polymer Materials and Technologies [SI]

Aleš Doliška, Ita Junkar, Stana Karin Kleinschek, Martina Modic, Miran Mozetič, Zdenka Peršin, Alenka Vesel

Method for Treatment of a Vascular Graft

The present invention refers to a method of treatment of a vascular graft addressing the need for improved methods of increasing hemocompatibility of vascular grafts made from polyethylene terephthalate polymers against the state of the art. The present invention does not involve deposition or grafting of any anti-thrombogenic coating on the inner walls of vascular grafts. Hence, it provides a method for improved hemocompatibility of vascular grafts by treatment of inner walls by excited oxygen molecules. The efficiency of the method which is the subject of this invention is confirmed by behaviour of blood platelets on modified vascular grafts. Against the state of the art the methods of the invention prevent transformation of platelets from normal state in healthy blood to highly activated states, which would further lead to undesired thrombus reactions. Thus the present invention improves hemocompatibility of artificial polyethylene terephthalate surfaces, as transformation of platelet shape from its normal state- round or discoid and dendritic to spread dendritic, spread and fully spread shape is highly reduced.

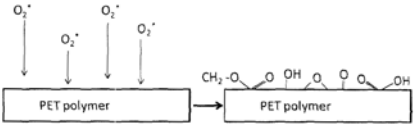

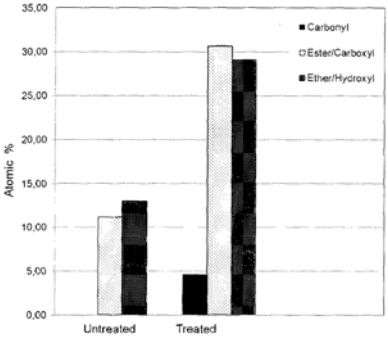

Physical Sciences

Physical and exact sciences, Biological sciences

Medical / health related

https://worldwide.espacenet.com/patent/search/family/047989347/publication/WO2014112956A1?q=wo2014112956

WIPO

2012

Ultrafast Quench Based Non-volatile Bistable Device

SI24265A

30. 11. 2012

Jožef Stefan Institute [SI], Centre of Excellence in Nanoscience and Nanotechnology – Nanocenter [SI]

Ljupka Stojčevska, Tomaž Mertelj, Igor Vaskivskyi, Dragan Mihailović

Trajna bistabilna pomnilna naprava na osnovi ultrahitrega kaljenja [SL], Ultrafast Quench Based Non-volatile Bistable Device [EN]

The invention refers to an ultrafast quench based non-volatile bi-stable device which consists of an active material on a passive or active substrate which changes its physical properties, after exposure to a sufficiently temporally short external perturbation causing an ultrafast quench. The perturbation can be from an external ultrashort laser pulse or ultrafast electrical pulse from an electro-optic device or any other generator of ultrashort pulses. This change of the materials properties can be detected as a change of optical properties or electrical resistance. The dielectric properties can be reverted back to their original state by the application of a heat pulse applied by an electrical heater within the device or an external laser.

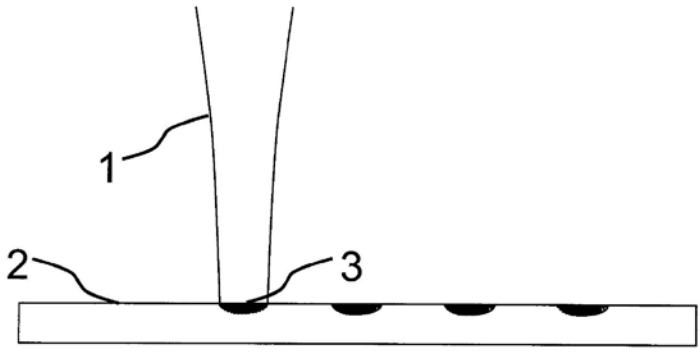

Physical Sciences

Physical and exact sciences

Other electronics related, Industrial products

https://worldwide.espacenet.com/publicationDetails/originalDocument?FT=D&date=20140630&DB=&locale=en_EP&CC=SI&NR=24265A&KC=A&ND=5

UIL RS

Extended patent application

WO2014084799A1

30 .9. 2013

Jožef Stefan Institute [SI], Centre of Excellence in Nanoscience and Nanotechnology – Nanocenter [SI]

Ljupka Stojčevska, Tomaž Mertelj, Igor Vaskivskyi, Dragan Mihailović

Ultrafast Nonvolatile Memory

https://worldwide.espacenet.com/patent/search/family/049622872/publication/WO2014084799A1?q=WO2014084799A1

Extended patent application

EP2926343A1

30. 09. 2013

Jožef Stefan Institute [SI], Centre of Excellence in Nanoscience and Nanotechnology – Nanocenter [SI]

Ljupka Stojčevska, Tomaž Mertelj, Igor Vaskivskyi, Dragan Mihailović

Ultrafast Nonvolatile Memory

https://worldwide.espacenet.com/publicationDetails/biblio?FT=D&date=20151007&DB=&locale=en_EP&CC=EP&NR=2926343A1&KC=A1&ND=4

Extended patent application

US9589631B2

30. 9. 2013

Jožef Stefan Institute [SI], Centre of Excellence in Nanoscience and Nanotechnology – Nanocenter [SI]

Ljupka Stojčevska, Tomaž Mertelj, Igor Vaskivskyi, Dragan Mihailović

Ultrafast Quench Based Nonvolatile Bistable Device

https://worldwide.espacenet.com/patent/search/family/049622872/publication/US9589631B2?q=US9589631B2

Method for Automatic Performance Diagnosis of a Photometric Particle Analyser

US9018583B2

6. 3. 2012

Jeffrey R. Blair [US], Anthony D. A. Hansen [US], Magee Scientific Co. [US], Griša Močnik [SI]

Anthony D.A. Hansen, Griša Močnik, Jeffrey R. Blair

Method for Automatic Performance Diagnosis of a Photometric Particle Analyzer

The subject of the invention is a method for diagnosing the operation of a photometric particle analyzer. The method may determine when the operation is degraded from normal operating conditions, automatically, and the result displayed locally as well as being transmitted to a remote observer. The present invention may be used by optical photometric particle analyzers, or by analyzers that measure other properties of particles collected on filters.

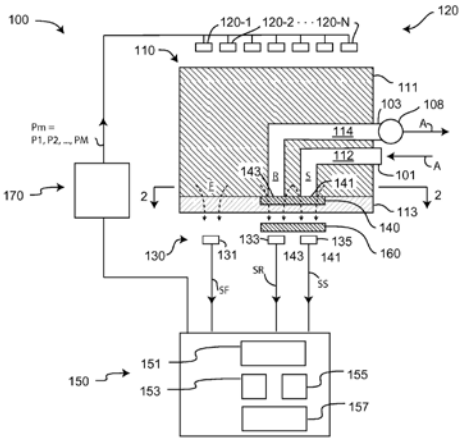

Physical Sciences

Physical and exact sciences, Measurements and standards, Protecting man and environment

Other electronics related, Medical / health related, Industrial products

https://worldwide.espacenet.com/patent/search/family/045976653/publication/US9018583B2?q=US9018583B2

US

Extended patent application

EP2498079A2

8. 3. 2012

Aerosol d. o. o. [SI]

Anthony D. A. Hansen, Griša Močnik, Jeffrey R. Blair

Method for Automatic Performance Diagnosis and Calibration of a Photometric Particle Analyzer

https://worldwide.espacenet.com/patent/search/family/045976653/publication/EP2498079B1?q=%20EP2498079B1

2011

Procedure of Analog and Digital Signal Processing and Their Information Which Is Contained in the Pulses and the Device for Carrying Out the Procedure

SI23959A

1. 12. 2011

Instrumentation Technologies d. d. [SI]

Borut Baričevič, Silvan Bucik, Borut Repič, Matjaž Vencelj

Postopek analogne in digitalne obdelave signalov, katerih informacija je vsebovana v pulzih, in naprava za izvedbo postopka [SL], Procedure of Analog and Digital Signal Processing and Their Information Which Is Contained in the Pulses and the Device for Carrying Out the Procedure [EN]

The present invention relates to a method for analogue and digital signal processing, the information of which is contained in pulses, and to a device for performing the method. According to the present invention, it is provided that the influence of intermittent discharges in the conversion of intermittently discharged signals into continuously discharged signals is compensated by an attached voltage source by means of which a capacitor is charged to differentiate said analog input signal.

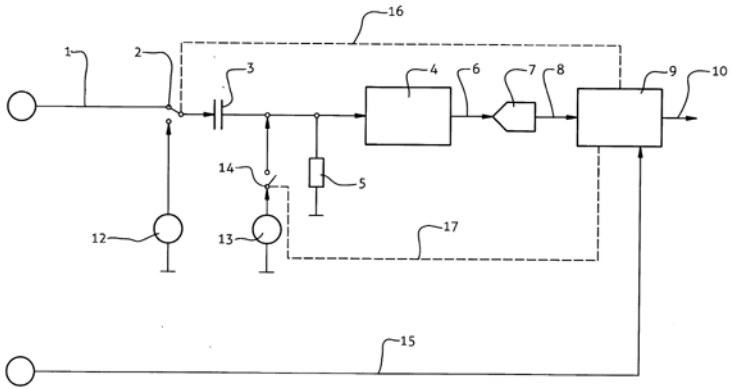

Physical Sciences

Physical and exact sciences, Measurements and standards

Computer related, Other electronics related

https://worldwide.espacenet.com/patent/search/family/048671007/publication/SI23959A?q=si23959

UIL RS

Method for a Synthesis of Quasi One-Dimensional Structures of 4d and 5d (Nb, Mo Ta, W) Transition Metals

SI23768A

24. 6. 2011

Jožef Stefan Institute [SI], Centre of Excellence in Nanoscience and Nanotechnology – Nanocenter [SI]

Adolf Jesih, Andrej Kovič, Aleš Mrzel

Postopek za sintezo kvazi enodimenzionalnih struktur 4d in 5d (Nb, Mo Ta, W) prehodnih kovin [SL], Method for a Synthesis of Quasi One-Dimensional Structures of 4d and 5d (Nb, Mo Ta, W) of Transition Metals [EN]

The subject of the invention is a method for a synthesis of one-dimensional structures, such as nanowires, microwires and nanobelts of 4d and 5d transition metals (Nb, Mo Ta, W). The invention belongs to the field of inorganic chemistry and chemistry of transition metals. The invention refers to a synthesis of quasi one-dimensional structures of transition metals by using a method of conversion of quasi one-dimensional compounds with a submicron cross-section of nanowires described with formula M6CYHZ, 8,2<y+z =10, wherein M is a transition metal (Nb, Mo Ta, W), C is a chalcogen (sulphur i(S), selenium (Se), tellurium (Te)); H is halogen (iodine (I)) by heating in the presence of hydrogen. This method provides for a synthesis of quasi one-dimensional structures, such as nanowires, microwires and nanobelts of 4d and 5d transition metals (Nb, Mo Ta, W).

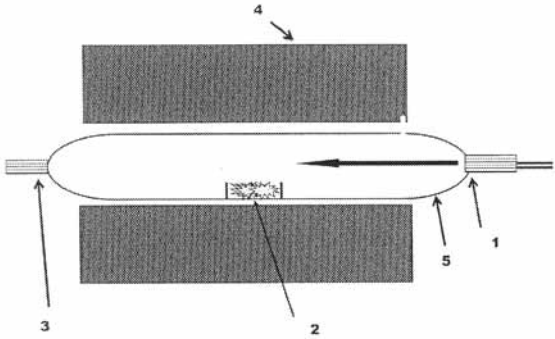

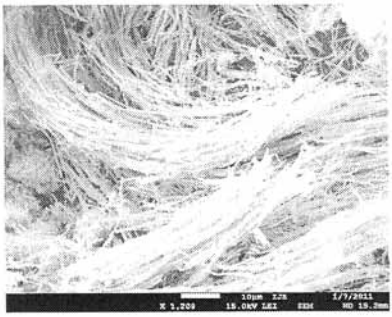

Physical Sciences

Physical and exact sciences

Industrial products, Other

https://worldwide.espacenet.com/patent/search/family/046829859/publication/SI23768A?q=SI23768A

EPO

Extended patent application

EP2723524B1

20. 6. 2012

Jožef Stefan Institute [SI], Centre of Excellence in Nanoscience and Nanotechnology – Nanocenter [SI]

Adolf Jesih, Andrej Kovič, Aleš Mrzel

Method for a Synthesis of Quasi One-Dimensional Structures of 4d and 5d (Nb, Mo Ta, W) Transition Metals [EN]

https://worldwide.espacenet.com/patent/search/family/046829859/publication/EP2723524B1?q=EP2723524B1

Extended patent application

WO2012177224A3

20. 6. 2012

Jožef Stefan Institute [SI], Centre of Excellence in Nanoscience and Nanotechnology – Nanocenter [SI], Adolf Jesih [SI], Andrej Kovič [SI], Aleš Mrzel [SI]

Adolf Jesih, Andrej Kovič, Aleš Mrzel

Method for a Synthesis of Quasi One-Dimensional Structures of 4d and 5d (Nb, Mo Ta, W) Transition Metals [EN]

https://worldwide.espacenet.com/patent/search/family/046829859/publication/WO2012177224A3?q=WO2012177224A3

Device for High-Frequency Excitation of Gas Plasma

SI23611A

20. 1. 2011

Jožef Stefan Institute [SI]

Miran Mozetič, Alenka Vesel, Rok Zaplotnik

Metoda in naprava za vzbujanje visokofrekvenčne plinske plazme [SL], Device for High-Frequency Excitation of Gas Plasma [EN]

The subject invention is a device for high-frequency excitation of gas plasma, which is to optimize the transmission of electromagnetic power radiofrequency generator (8) in a gas plasma. Power transmission

is optimized by using two or more parallel overlapping excitation and indented coils (11, 12), which are connected in series within the generator (8), high cable (9), the conciliation Art (10), the excitation coil (11, 12). Measurement of voltage at the terminal of the excitation coil (11, 12) prove that the same power transfer to a lower voltage dual exciter coil (11, 12), which is composed of parallel overlapping excitation coils (11, 12) as normal exciter coil (11). At the same voltage coil terminals (11, 12), the plasma also much more intense, if it is generated in two parallel overlapping excitation coil (11, 12).

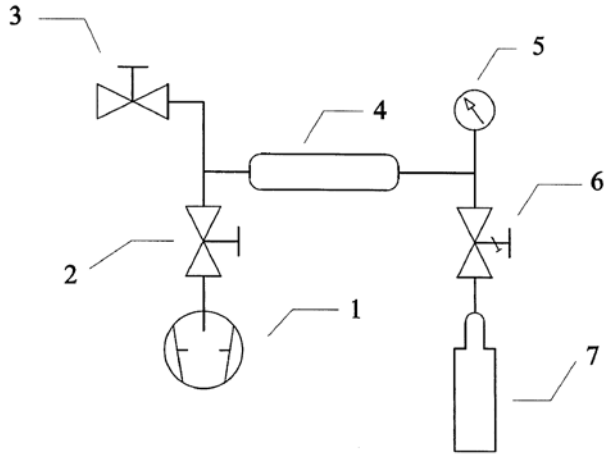

Physical Sciences

Physical and exact sciences, Other industrial technologies

Industrial products, Other

https://worldwide.espacenet.com/patent/search/family/045922789/publication/SI23611A?q=si23611

UIL RS

Extended patent application

DE112012000015B4

19. 1. 2012

Jožef Stefan Institute [SI]

Miran Mozetič, Alenka Vesel, Rok Zaplotnik

Vorrichtung für die Anregung eines Hochfrequenz-Gasplasmas

https://worldwide.espacenet.com/patent/search/family/045922789/publication/DE112012000015B4?q=pn%3DDE112012000015B4

Extended patent application

WO2012099548A1

19. 1. 2012

Jožef Stefan Institute [SI], Miran Mozetič [SI], Alenka Vesel [SI], Rok Zaplotnik [SI]

Miran Mozetič, Alenka Vesel, Rok Zaplotnik

Device for High-Frequency Gas Plasma Excitation

https://worldwide.espacenet.com/patent/search/family/045922789/publication/WO2012099548A1?q=pn%3DWO2012099548A1

Method for Dynamically Controlling the Density Neutral Atoms with an Active Element in a Plasma Vacuum Chamber and a Device for Treatment of Solid Materials by Using the Present Method

SI23626A

19. 1. 2011

Jožef Stefan Institute [SI]

Miran Mozetič, Gregor Primc

Metoda za dinamično nadzorovanje gostote nevtralnih atomov v plazemski vakuumski komori in napravaza obdelavo trdih materialov s to metodo [SL], Method for Dynamically Controlling the Density Neutral Atoms with an Active Element in a Plasma Vacuum Chamber and a Device for Treatment of Solid Materials by Using the Present Method [EN]

The subject invention is a method for dynamically controlling the density neutral atoms with an active element in a plasma vacuum chamber (4) and a device for treatment of solid materials by using the present method. Control system through measurement and record ingdensity of neutral atoms of oxygen, nitrogen or hydrogen admission input data (17 and 18), under which generates control signals for adjusting and controlling the position of the active element (20), with a high coefficient of a heterogeneous surface recombination of oxygen atoms, nitrogen or hydrogen, with the corresponding engine (21). The system includes the density of neutral oxygen atoms, nitrogen or hydrogen through various methods such as catalytic probe (22), optical emission spectroscopy (23 and 24), optical absorption spectroscopy and titration. This kind of control enables dynamic control of the density of neutral atoms in around the treated sample, which is independent of the workpiece other discharge parameters, and are actively changing the density neutral atoms in the presence or absence of a workpiece independently of the other discharge parameters.

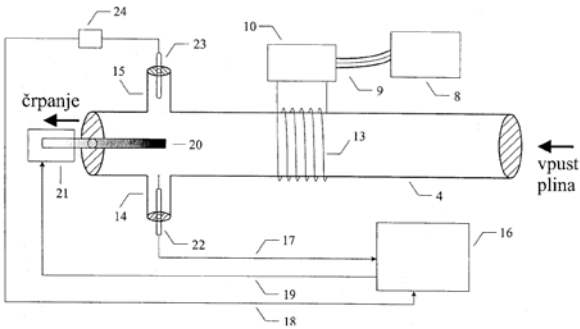

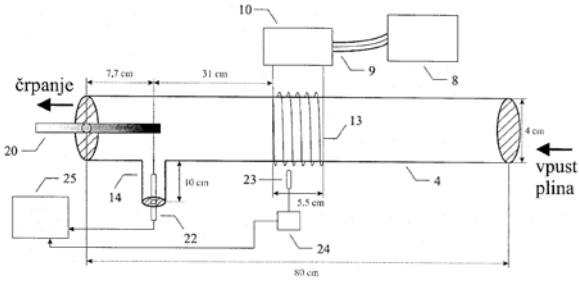

Physical Sciences

Other industrial technologies, Physical and exact sciences, Measurements and standards

Industrial products, Other

https://worldwide.espacenet.com/patent/search/family/045879004/publication/SI23626A?q=si23626

UIL RS

Extended patent application

WO2012099547A1

16. 1. 2012

Jožef Stefan Institute [SI], Miran Mozetič [SI], Gregor Primc [SI]

Miran Mozetič, Gregor Primc

Method for a Dynamic Control of Density of Neutral Atoms in a Plasma Vacuum Chamber and a Device for the Processing of Solid Materials by Using This Method

https://worldwide.espacenet.com/patent/search/family/045879004/publication/WO2012099547A1?q=pn%3DWO2012099547A1

2010

Method for Quantum Distribution of the Short-Range Key

SI23596A

28. 12. 2010

Jožef Stefan Institute [SI]

Roman Novak, Matjaž Vencelj

Metoda za kvantno distribucijo ključa kratkega dosega [SL], Method for Quantum Distribution of the Short-Range Key [EN]

The present invention relates to a method for quantum distribution of the short-range key is based on entangled quantum states of photons gamma. Exploiting Compton interaction of photons with matter to establish a quantum channel between legitimate entities. Correlation of the detected azimuthal angles after the scattered entangled photons forms a conceptual noise channel with known border noise. Key distribution protocol for the exchange messages over a public communication channel to reconcile key bits in high noise environment using the selected scheme correction of errors. The invention also includes two design solutions of device for the realization of the method, including parameters to maximize the bit rate at a constant harmonious key sources for activities such as binary encoder.

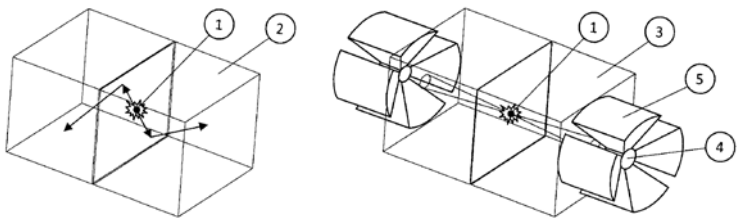

Physical Sciences

Physical and exact sciences

Other

https://worldwide.espacenet.com/patent/search/family/046384051/publication/SI23596A?q=si23596

UIL RS

Hard Protective Coatings with the Possibility of Changing their Colour

SI23538A

22. 11. 2010

Jožef Stefan Institute [SI]

Miha Čekada, Jožko Fišer, Damjan Matelič, Andrej Mohar, Matjaž Panjan, Peter Panjan, Tomaž Sirnik

Trde zaščitne prevleke z možnostjo spreminjanja njihove barve [SL], Hard Protective Coating with the Possibility of Changing Their Colour [EN]

The subject of the invention is hard protective coatings with the possibility to change their color. A hard coating with a thickness of a few micrometers is deposited on the working surface of the base material which is usually tool steel or cemented carbide. The coatings based on this invention are composed of the following layers: the bottom protective layer of a hard coating which protects the substrate against wear and corrosion; the intermediate reflective layer which reflects light in the visible part of the spectrum and protects the substrate against wear and corrosion; and the semitransparent top layer which protects the substrate against wear and corrosion and in combination with the reflection layer determines the coating color. The top layer is made of a material which partially transmits visible light and is composed of nitrides, carbides, carbonitrides or borides.

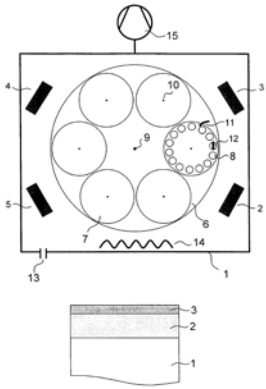

Physical Sciences

Industrial manufacturing, material and transport, Physical and exact sciences

Industrial products

https://worldwide.espacenet.com/patent/search/family/046209403/publication/SI23538A?q=si23538

UIL RS

Spherical Liquid Crystal Laser

SI23567A

10. 11. 2010

Jožef Stefan Institute [SI]

Matjaž Humar, Igor Muševič

Kroglasti tekočekristalni laser [SL], Spherical Liquid Crystal Laser [EN]

The invention relates to one or more drops of chiral liquid crystal, which serve as a point source of laser light sources. Origin is in the shape of the teardrop-shaped chiral liquid crystal, and active medium, which is dispersible in liquid crystals. The source is in the spherical shape and size of a few nanometers and 100 micrometers. Drop consists of a chiral liquid crystal, which has selective reflection of light emission in the range of the active medium and can be cholesteric liquid crystal, mixture of nematic liquid crystal and chiral dopant or as other chiral liquid phase, priority blue phase, ferroelectric phase or other chiral phases of soft matter.

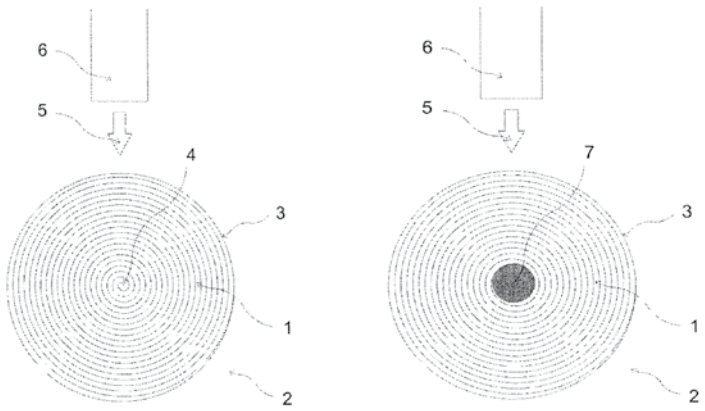

Physical Sciences

Physical and exact sciences, Other industrial technologies

Industrial products

https://worldwide.espacenet.com/patent/search/family/044925489/publication/SI23567A?q=si23567

UIL RS

Extended patent application

CN103201914B

8. 11. 2011

Jožef Stefan Institute [SI]

Matjaž Humar, Igor Muševič

Spherical Liquid Crystal Laser

https://worldwide.espacenet.com/patent/search/family/044925489/publication/CN103201914B?q=CN103201914B

Extended patent application

EP2638604B1

8. 11. 2011

Jožef Stefan Institute [SI]

Matjaž Humar, Igor Muševič

Spherical Liquid Crystal Laser

https://worldwide.espacenet.com/patent/search/family/044925489/publication/EP2638604B1?q=%20EP2638604B1

Extended patent application

WO2012062450A1

8. 11. 2011

Jožef Stefan Institute [SI]; Humar Matjaz [SI]; Musevic Igor [SI]

Matjaž Humar, Igor Muševič

Spherical Liquid Crystal Laser

https://worldwide.espacenet.com/patent/search/family/044925489/publication/WO2012062450A1?q=pn%3DWO2012062450A1

Extended patent application

HK1187157A1

7. 1. 2014

Jožef Stefan Institute [SI]

Matjaž Humar, Igor Muševič

Spherical Liquid Crystal Laser

https://worldwide.espacenet.com/patent/search/family/044925489/publication/HK1187157A1?q=pn%3DHK1187157A1

Extended patent application

JP6014595B2

8. 11. 2011

Jožef Stefan Institute [SI]

Matjaž Humar, Igor Muševič

Spherical Liquid Crystal Laser

https://worldwide.espacenet.com/patent/search/family/044925489/publication/JP6014595B2?q=JP6014595B2

Extended patent application

KR101508449B1

8. 11. 2011

Jožef Stefan Institute [SI]

Matjaž Humar, Igor Muševič

Spherical Liquid Crystal Laser

https://worldwide.espacenet.com/patent/search/family/044925489/publication/KR101508449B1?q=KR101508449B1

Extended patent application

PL2638604T3

8. 11. 2011

Jožef Stefan Institute [SI]

Matjaž Humar, Igor Muševič

Spherical Liquid Crystal Laser

https://worldwide.espacenet.com/patent/search/family/044925489/publication/PL2638604T3?q=pn%3DPL2638604T3

Extended patent application

RU2559124C2

8. 11. 2011

Jožef Stefan Institute [SI]

Matjaž Humar, Igor Muševič

Spherical Liquid Crystal Laser

https://worldwide.espacenet.com/patent/search/family/044925489/publication/RU2559124C2?q=RU2559124C2

Extended patent application

US9263843B2

8. 11. 2011

Jožef Stefan Institute [SI], Matjaž Humar [SI], Igor Muševič [SI]

Matjaž Humar, Igor Muševič

Spherical Liquid Crystal Laser

https://worldwide.espacenet.com/patent/search/family/044925489/publication/US9263843B2?q=US9263843B2

An Array Smell Sensor Based on the Measurement of the Junction Resistance of Nanowires with Different Metals

SI23582A

22. 12. 2010

Jožef Stefan Institute [SI], Centre of Excellence in Nanoscience and Nanotechnology – Nanocenter [SI]

Aljaž Drnovšek, Dragan D. Mihailović

Sistem senzorjev za vonjave delujoč na osnovi impedance stičišč nanožic z različnimi kovinami [SL], An Array Smell Sensor Based on the Measurement of the Junction Resistance of Nanowires with Different Metals [EN]

The object of this invention is an array smell sensor based on the measurement of the junction resistance of nanowires (6) with different metals. The invention describes a multi-element array recognitive sensor, i.e. e-nose, based on the detection of analytes (1) within nanowire/metal junctions. The contact impedance between a nanowire (6) and a metal electrode (4) changes when different molecules are adsorbed in the region of contact between the metal electrodes (4) and the nanowire (6). The impedance change of each element is different when different metal electrodes (9-12) are used, which forms the basis for a multi-element sensor made with different materials, each of which giving a different response. The recognitive sensing properties are obtained by analyzing - using appropriate software -the response of the entire array and comparing it with the reference response for different analytes (1).

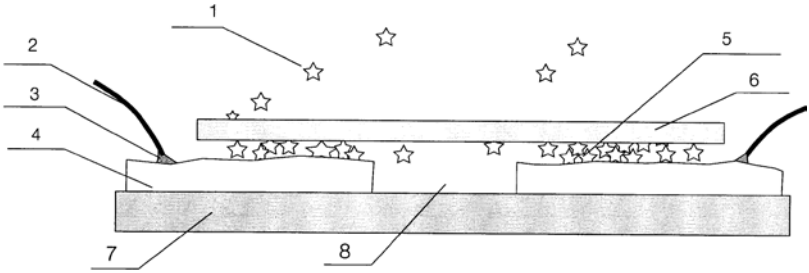

Physical Sciences

Physical and exact sciences, Electronics, IT and telecoms

Other electronics related

https://worldwide.espacenet.com/patent/search/family/045774306/publication/SI23582A?q=si23582

UIL RS

Extended patent application

WO2012087247A3

20. 12. 2011

Jožef Stefan Institute [SI], Centre of Excellence in Nanoscience and Nanotechnology – Nanocenter [SI], Aljaž Drnovšek [SI], Dragan D. Mihailović [SI]

Aljaž Drnovšek, Dragan D. Mihailović

An Array Smell Sensor Based on the Measurement of the Junction Resistance of Nanowires with Different Metals

https://worldwide.espacenet.com/patent/search/family/045774306/publication/WO2012087247A3?q=WO2012087247A3

Laser System for Treatment of Body Tissue

EP2618768B1

24. 9. 2010

Fotona d. d. [SI]

Marko Kazič, Matjaž Lukač

Laser System for Treatment of Body Tissue

The invention relates to a laser system for the treatment of body tissue (1) on an inner circumferential tissue surface (2). The laser system comprises a laser source (1) for the generation of a laser beam (3) and a hand piece (4) with a treatment head (5). The treatment head (5) extends along a longitudinal axis (6) and is adapted in a manner, that the longitudi-

nal axis (6) of the treatment head (5) during operation is at least approximately parallel to the inner circumferential tissue surface (2). During operation the laser beam (3) enters the treatment head (5) in the direction of the longitudinal axis (6). A deflection mirror (7) is disposed in the treatment head (5) and guides the laser beam (3) radially outwards out of the treatment head (5) onto the inner circumferential tissue surface (2). Movable deflection means (8) for the laser beam (3) are provided to scan the inner circumferential tissue surface (2) within a treatment area (9) at least in a circumferential direction.

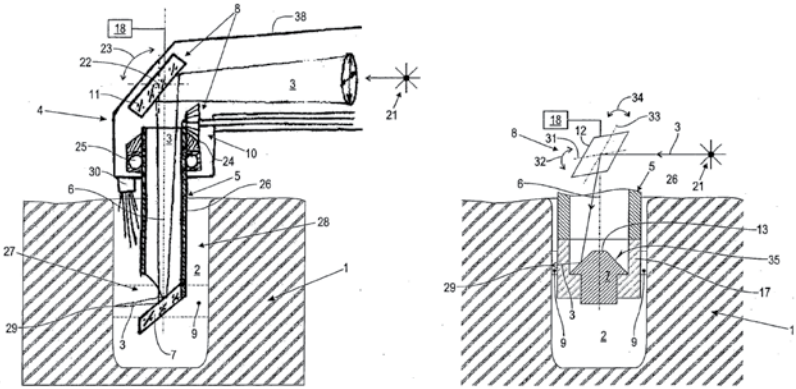

Physical Sciences

Physical and exact sciences, Biological sciences

Medical / health related, Other

https://worldwide.espacenet.com/patent/search/family/043127376/publication/EP2618768B1?q=EP2618768B1

EPO

Extended patent application

PL2618768T3

24. 9. 2010

Fotona d. d. [SI]

Marko Kazič, Matjaž Lukač

Układ laserowy do traktowania tkanek ciała

https://worldwide.espacenet.com/patent/search/family/043127376/publication/PL2618768T3?q=pn%3DPL2618768T3

Extended patent application

US2013190738A1

24. 9. 2010

Fotona d. d. [SI], Marko Kazič [SI], Matjaž Lukač [SI]

Marko Kazič, Matjaž Lukač

Laser System for Treatment of Body Tissue

https://worldwide.espacenet.com/patent/search/family/043127376/publication/US2013190738A1?q=pn%3DUS2013190738A1

Extended patent application

WO2012037954A1

24. 9. 2010

Fotona d. d. [SI], Marko Kazič [SI], Matjaž Lukač [SI]

Marko Kazič, Matjaž Lukač

Laser System for Treatment of Body Tissue

https://worldwide.espacenet.com/patent/search/family/043127376/publication/WO2012037954A1?q=pn%3DWO2012037954A1

2009

Method for Synthesis of Magnetic Liposomes in Electric Field

SI23095A

10. 7. 2009

Jožef Stefan Institute [SI], Nanotesla Institute Ljubljana [SI]

Kristina Eleršič, Aleš Iglič, Aljoša Košak, Miran Mozetič, Janez Pavlič, Alenka Vesel, Andrej Žnidaršič

Metoda za sintezo magnetnih liposomov v električnem polju [SL], Method for Synthesis of Magnetic Liposomes in Electric Field [EN]

The subject of the invention is a method for synthesis of magnetic liposomes consisting of a phospholipid bubble, i.e. a vesicle, and of magnetic nanoparticles trapped into the phospholipid layer. The procedure according to the invention comprises the procedure of electroformation of phospholipid vesicles, i.e. liposomes, in the presence of magnetic nanoparticles. The electric field enhances the formation of magnetic liposomes from the mixture of a nonpolar solvent, lipids, cholesterol, saccharose and magnetic nanoparticles. Because this kind of magnetic liposomes can be guided by means of a suitable exterior magnetic field, they are of interest for applications in medicine for therapeutic purposes, e.g. as drug carriers to specific locations of disease or for the use in immune tests for isolation and detection of specific molecules from solutions.

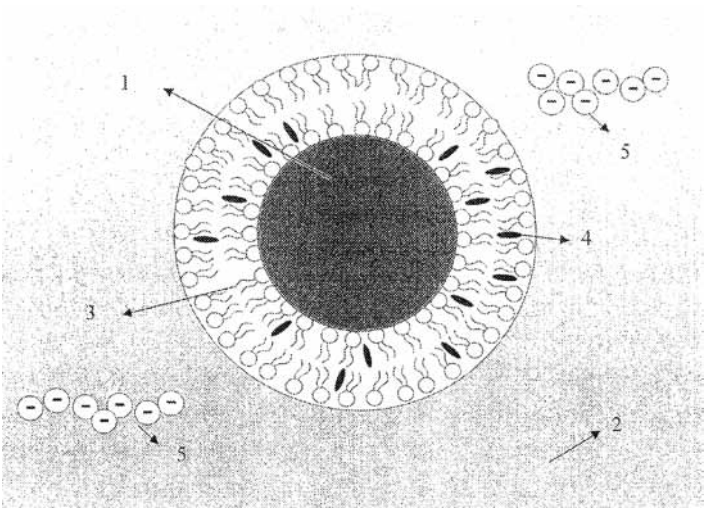

Physical Sciences

Physical and exact sciences

Medical / health related

https://worldwide.espacenet.com/patent/search/family/043501646/publication/SI23095A?q=si23095

UIL RS

Method of Treatment of Biomedical Polymeric Prostheses for Improvement of Their Antithrombogenous Properties

SI23021A

20. 4. 2009

Jožef Stefan Institute [SI]

Uroš Cvelbar, Dragoslav Domanović, Ita Junkar, Metka Krašna, Miran Mozetič, Alenka Vesel

Metoda obdelave bio-medicinskih polimernih protez za izboljšanje njihovih antitrombogenih lastnosti [SL], Method of Treatment of Biomedical Polymeric Prostheses for Improvement of Their Antithrombogenous Properties [EN]

The subject of the invention is a method of treatment of biomedical prostheses for improvement of their antithrombogenous properties. The mentioned biomedical prostheses are the cardiovascular ones, particularly artificial veins and stents made of polyethyleneterephtalate (PET) polymer. The method is based on treatment of cardiovascular prosthesis surface with a suitable combination of dose of neutral oxygen atoms and positively charged molecular and atomic oxygen ions. After the dose of said atoms and ions has been received, the surface of cardiovascular prostheses becomes less susceptible to bonding of thrombocytes. The method is characterised in that the exposedness to the mixture of neutral oxygen atoms and positively charged molecular and atomic oxygen ions in pulses is such that in an individual pulse, the achieved dose of neutral oxygen atoms amounts to between 10exp20/m2 and 10exp26/m2 and the dose of charged molecular and atomic oxygen ions to between 10exp16/m2 and 10exp23/m2 with time intervals between individual pulses lasting between 10 s and 300 s, and that the stream of neutral oxygen atoms and positively charged molecular and atomic oxygen ions onto the surface of the prosthesis is approximately uniform.

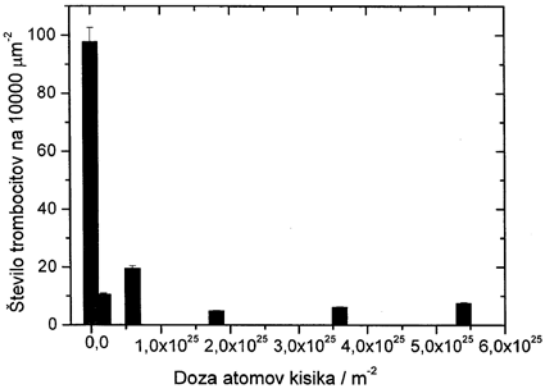

Physical Sciences

Physical and exact sciences, Biological sciences

Medical / health related

https://worldwide.espacenet.com/patent/search/family/042246151/publication/SI23021A?q=si23021

UIL RS

Extended patent application

WO2010123465A3

18. 3. 2010

Jožef Stefan Institute [SI], Uroš Cvelbar [SI], Dragoslav Domanović [SI], Ita Junkar [SI], Metka Krašna [SI], Miran Mozetič [SI], Alenka Vesel [SI]

Uroš Cvelbar, Dragoslav Domanović, Ita Junkar, Metka Krašna, Miran Mozetič, Alenka Vesel

Method of Treatment of Biomedical Polymeric Prostheses for Improvement of Their Antithrombogenous Properties

https://worldwide.espacenet.com/patent/search/family/042246151/publication/WO2010123465A3?q=WO2010123465A3

Extended patent application

AT513072B1

18. 3. 2010

Jožef Stefan Institute [SI]

Uroš Cvelbar, Dragoslav Domanović, Ita Junkar, Metka Krašna, Miran Mozetič, Alenka Vesel

Verfahren Zur Behandlung Biomedizinischer Implantate Zur Verbesserung Deren Antithrombogener Eigenschaften

https://worldwide.espacenet.com/patent/search/family/042246151/publication/AT513072B1?q=pn%3DAT513072B1

Method and Device for Instantaneous Determination of Moisture in Wood

SI23011A

26. 3. 2009

Jožef Stefan Institute [SI]

Maks Merela, Urška Mojca Mikac, Primož Oven, Igor Serša

Metoda in naprava za takojšnjo določitev vlažnosti lesa [SL], Method and Device for Instantaneous Determination of Moisture in Wood [EN]

The subject of the invention is a method and a device for instantaneous determination of moisture content in wood by means of nuclear magnetic resonance and weighing. The invention is a method and device based on the method of nuclear magnetic resonance (NMR) for the determination of relative moisture content of wood from the ratio between the mass of

water in wood as determined from the free-precession signal (FID) within 25 to 35 us after the excitation and the mass of moist wood as determined by weighing, from which the previously calculated mass of water contained in wood has been subtracted. The device for instantaneous determination of moisture in wood comprises a permanent magnet with an RF coil into which a specimen is inserted, a spectrometer (1), an RF transmitter (3) for carrying out NMR measurements and a scales (4), where all are controlled by a computer which automatically determines the moisture content of wood from the measured out mass of the specimen and the intensity of the FID signal.

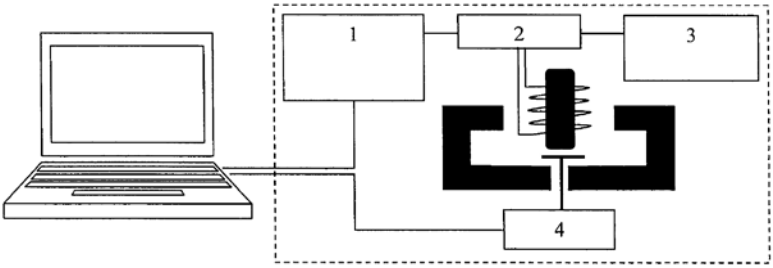

Physical Sciences

Industrial manufacturing, material and transport, Physical and exact sciences

Industrial products, Other

https://worldwide.espacenet.com/patent/search/family/042824920/publication/SI23011A?q=si23011

UIL RS

Method for Storing Digital Information and Storage Element

DE102009000124A1

9. 1. 2009

Forschungszentrum Juelich GmbH [DE], Institute of Mathematics, Physics and Mechanics [SI], Jožef Stefan Institute [SI]

Janez Dolinšek, Michael Feuerbacher, Marc Heggen, Zvonko Jagličić, Marko Jagodič

Method for Storing Digital Information and Storage Element [EN], Verfahren zur Speicherung digitaler Information nebst Speicherelement [DE]

The subject of the invention is a method involving cooling of a storage medium in a monotonic manner in the non-ergodic phase. The cooling rate is modulated for storing a logic 1. The cooling is interrupted for one second for storing the logic 1. A magnetically dissatisfied system or an electrically dissatisfied dielectric is selected as the storage medium. An independent claim is also included for a device with a storage medium for storing digital information in the storage medium.

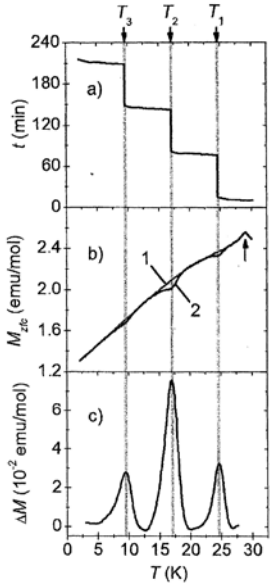

Physical Sciences

Physical and exact sciences, Electronics, IT and telecoms

Computer related

https://worldwide.espacenet.com/patent/search/family/041613426/publication/DE102009000124A1?q=DE102009000124A1

DE

Extended patent application

EP2207177A3

14. 12. 2009

Forschungszentrum Juelich GmbH [DE], Institute of Mathematics, Physics and Mechanics [SI], Jožef Stefan Institute [SI]

Janez Dolinšek, Michael Feuerbacher, Marc Heggen, Zvonko Jagličić, Marko Jagodič

Method for Storing Digital Information and Storage Element

https://worldwide.espacenet.com/patent/search/family/041613426/publication/EP2207177A3?q=%20EP2207177A3

2008

Method and Capacitance Sensor for Counting Aerosol Nanoparticles

SI22895A

27. 10. 2008

Cosylab d. d. [SI], Jožef Stefan Institute [SI]

Damjan Golob, Ivan Iskra, Mark Pleško, Maja Remškar, Marko Viršek

Metoda in kapacitivnostni senzor za štetje aerosolskih nanodelcev [SL], Method and Capacitance Sensor for Counting Aerosol Nanoparticles [EN]

The invention refers to a method and capacitance sensor for counting aerosol nanoparticles in the electrical manner. Aerosol nanoparticles on which some liquid is applied during a preliminary process according to known procedures, change the capacitance of the capacitor's dielectric after entering its area, which activates an electric signal. The method enables detection of aerosol nanoparticles in a wide range of their frequency of occurrence in the air and is not specific for a certain shape or chemical composition of nanoparticles.

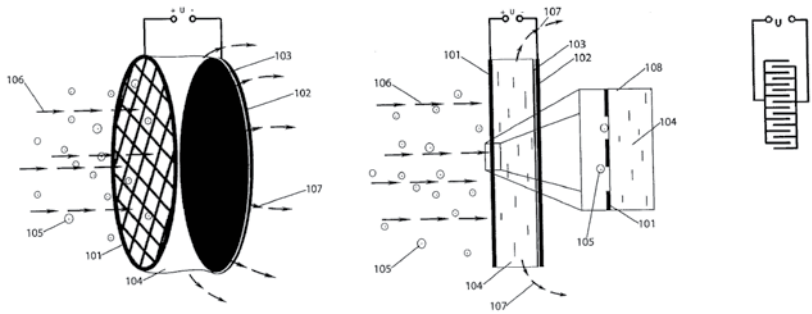

Physical Sciences

Physical and exact sciences, Electronics, IT and telecoms

Other electronics related

https://worldwide.espacenet.com/patent/search/family/041557468/publication/SI22895A?q=si22895

UIL RS

Extended patent application

WO2010050904A1

8. 10. 2009

Cosylab d. d. [SI], Jožef Stefan Institute [SI], Damjan Golob [SI], Ivan Iskra [SI], Mark Pleško [SI], Maja Remškar [SI], Marko Viršek [SI]

Damjan Golob, Ivan Iskra, Mark Pleško, Maja Remškar, Marko Viršek

Method and Capacitance Sensor for Counting Aerosol Nanoparticles

https://worldwide.espacenet.com/patent/search/family/041557468/publication/WO2010050904A1?q=pn%3DWO2010050904A1

Extended patent application

US9151724B2

8. 10. 2009

Jožef Stefan Institute [SI], Damjan Golob [SI], Ivan Iskra [SI], Mark Pleško [SI], Maja Remškar [SI], Marko Viršek [SI]

Damjan Golob, Ivan Iskra, Mark Pleško, Maja Remškar, Marko Viršek

Method and Capacitance Sensor for Counting Aerosol Nanoparticles

https://worldwide.espacenet.com/patent/search/family/041557468/publication/US9151724B2?q=US9151724B2

Manually Guided Articulated Arm

US9186222B2

3. 9. 2008

Fotona d. d. [SI], Jožica Kranjec [SI], Matjaž Lukač [SI], Marko Marinček [SI]

Jožica Kranjec, Matjaž Lukač, Marko Marinček

Manually Guided Articulated Arm

An articulated arm for applying a laser beam to a treatment zone has an arm section and a horizontal pivot joint. A spring arrangement acts on the pivot joint and has a cam disk and a pressure member following the cam disk contour as the arm section pivots. The arm section has, relative to a vertical direction, positive and negative pivot angle ranges. In the positive range the spring arrangement relieves the pivot joint from weight forces. When a resting angle in the negative range is reached the articulated arm rests in a support device. A total moment resulting from a weight force moment of the articulated arm and a restoring moment of the spring arrangement acts on the articulated arm about the pivot joint; cam disk contour and spring pretension are matched such that for the resting angle the total moment is oriented toward the support device.

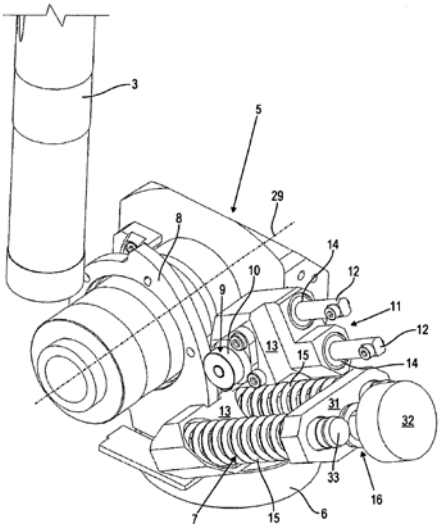

Physical Sciences

Physical and exact sciences, Other industrial technologies

Medical / health related, Other

https://worldwide.espacenet.com/patent/search/family/041726476/publication/US2010057062A1?q=us9186222

US

Method for Operating a Laser System and Laser System for Cosmetically Bleaching Teeth

EP2030591A1

7. 8. 2008

Fotona d. d. [SI]

Boris Cenčič, Matjaž Lukač

Method for Operating a Laser System and Laser System for Cosmetically Bleaching Teeth

The invention concerns a laser system and a method for operating such a laser system (1) for bleaching teeth (2) in which method a water-containing bleaching agent (3) applied to the teeth (2) is heated by means of a laser beam (4). The laser beam (4) has a wavelength (») in a range of 2.6 µm, inclusive, to 3.1 µm, inclusive, or in a range of 10.0 µm, inclusive, to 11.0 µm, inclusive. The laser system (1) is operated in pulse mode with individual pulses (9) of the laser beam (4). The individual pulses (9) each have a fluence (F) which is below a vaporization threshold fluence (F th) of the bleaching agent (3).

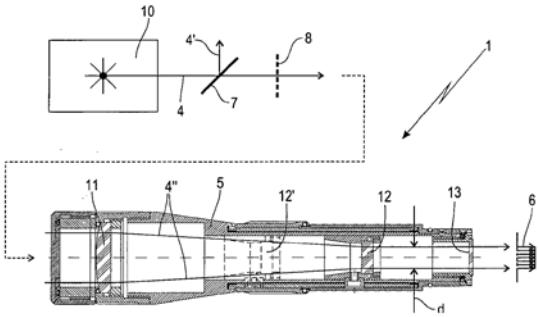

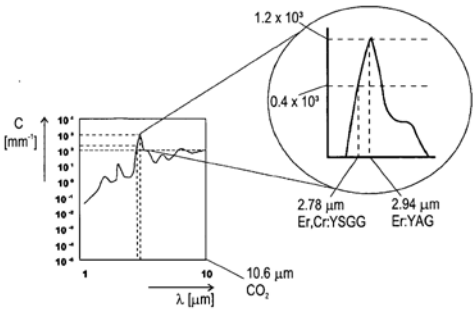

Physical Sciences

Physical and exact sciences

Medical / health related

https://worldwide.espacenet.com/patent/search/family/039015823/publication/EP2030591A1?q=EP2030591A1

EPO

Extended patent application

US8011923B2

1. 9. 2008

Fotona d. d. [SI]

Boris Cenčič, Matjaž Lukač

Method for Operating a Laser System and Laser System for Cosmetically Bleaching Teeth

https://worldwide.espacenet.com/patent/search/family/039015823/publication/US8011923B2?q=US8011923B2

2007

Laser System

EP1985254B1

26. 4. 2007

Fotona d. d. [SI]

Boris Cenčič, Marko Marinček

Laser System

The invention relates to laser system with a laser source (1) and an articulated arm (2). The articulated arm (2) comprises an optical arrangement (3) for guiding a laser beam (4) from the laser source (1) along an optical path (5) in the articulated arm (2) to a target location (6). Within the optical path (5) at least one focus size crossing area (7) of the laser beam (4) is provided. The optical arrangement (3) comprises at least one optical cell (8) with an input window (9) and an output window (10) for passing the laser beam (4) therethrough, wherein the crossing area (7) is positioned within the optical cell (8). The optical cell (8) has a gas fill with an energy threshold for ionization that is increased in comparison to that of ambient air.

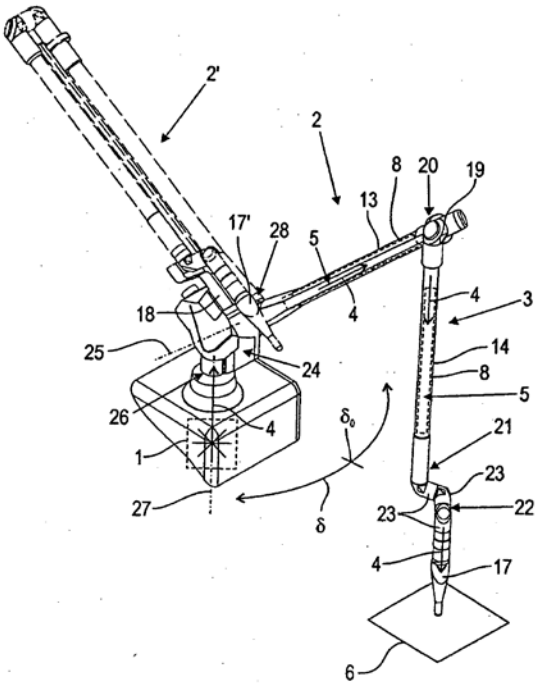

Physical Sciences

Physical and exact sciences

Industrial products, Other

https://worldwide.espacenet.com/patent/search/family/038197982/publication/EP1985254B1?q=EP1985254B1

EPO

Extended patent application

AT444718T

26. 4. 2007

Fotona d. d. [SI]

Boris Cenčič, Marko Marinček

Lasersystem

https://worldwide.espacenet.com/patent/search/family/038197982/publication/AT444718T?q=%20AT444718T

Extended patent application

US7778306B2

22. 4. 2008

Fotona d. d. [SI]

Boris Cenčič, Marko Marinček

Laser System

https://worldwide.espacenet.com/patent/search/family/038197982/publication/US7778306B2?q=US7778306B2

Polarisation Amplified Two-Channel NQR/NMR (PA NQR/NMR) Detection of Solid and Liquid Explosives by Using Multi-Pulse Series

SI22459A

22. 1. 2007

Jožef Stefan Institute [SI]

Tomaž Apih, Robert Blinc, Gojmir Lahajnar, Janko Lužnik, Janez Seliger, Zvonko Trontelj

Polarizacijsko ojačana dvo-kanalna NQR/NMR (PO NQR/NMR) detekcija trdnih in tekočih eksplozivov ob uporabi multi-pulznih sekvenc [SL], Polarisation Amplified Two-Channel NQR/NMR (PA NQR/NMR) Detection of Solid and Liquid Explosives by Using Multi-Pulse Series [EN]

Subject of the invention is a polarisation amplified two-channel NQR/NMR (PA NQR/NMR) detection of solid and liquid explosives by using multi-pulse series, this means a two-channel detection of solid and liquid explosives based on the polarisation amplified nuclear quadruple resonance (NQR) and proton nuclear quadruple resonance (NMR). According to the invention it is possible to detect solid and liquid explosives in dug (land) mines with small metal content, in the magnitude of 0.5 g per igniter and with only 50 - 100 g of explosive. Typical of the detection of solid and liquid explosives according to the invention is that by using a magnet for previous magnetic polarization of hydrogen nuclei in the explosive in a high magnetic field B0 is not equal to zero by using fast NMR radio-frequency (RF) Carr-Purcell pulse series of the NMR channel I or can be verified whether the NMR spin-spin relaxation time T2 of the nuclei 1H is short (us) or long (ms) which is typical for liquid explosives, while in the first case for solid explosive, and in this case by using the NQR channel II by previous polarization of hydrogen nuclei at B0 does not equal zero by using a multi-pulse „spin-locking“ radio-frequency series alpha 0 (tau - alpha 90 degrees - tau)n, where alpha 90 degrees means, that this pulse is phase-staggered by 90 degrees regarding the previous pulse alpha 0 and n is the number of repetitions of the basic series of the RF pulses and alpha the width of the RF pulse which optimizes the detected NQR signal in the field B0 = 0, a series of spin echoes by a single composite pulse series is obtained, and by averaging the spin echoes within one series the detection and specification time is shortened even for solid explosives through low NQR resonance frequencies by a factor of 100 and more.

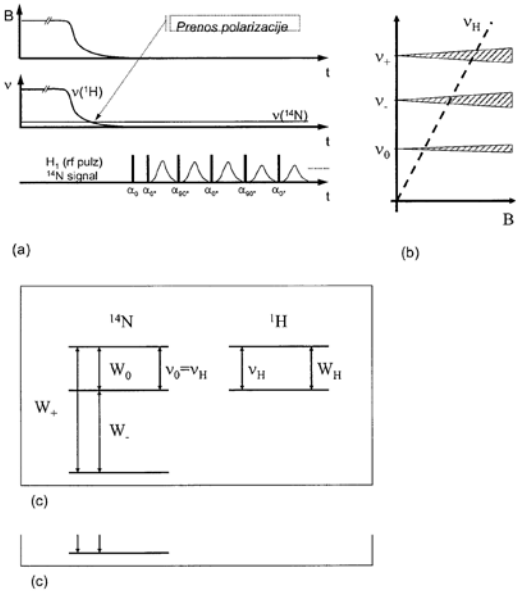

Physical Sciences

Physical and exact sciences, Protecting man and environment

Other electronics related, Industrial products

https://worldwide.espacenet.com/patent/search/family/039322427/publication/SI22459A?q=si22459

UIL RS

Extended patent application

EP1947449A1

18. 1. 2008

Jožef Stefan Institute [SI]

Tomaž Apih, Robert Blinc, Gojmir Lahajnar, Janko Lužnik, Janez Seliger, Zvonko Trontelj

Polarisation Enhanced Two-Channel NQR/NMR (PA NQR/NMR) Detection of Solid and Liquid Explosives Using Multi-Pulse Sequences

https://worldwide.espacenet.com/patent/search/family/039322427/publication/EP1947449A1?q=%20EP1947449A1

Pressureless Seasonal Water-Based Thermal Tank with System for Emphasising Water Temperature Layers

SI22504A

2. 4. 2007

Janez Štrancar [SI]

Janez Štrancar

Netlačni sezonski vodni hranilnik toplote s sistemom za poudarjanje temperaturne slojenosti vode [SL], Pressureless Seasonal Water-Based Thermal Tank with System for Emphasising Water Temperature Layers [EN]

The invention releates to a pressureless seasonal water-based thermal tank enabling an indirect improvement of the efficiency rate of gathering solar energy, its transformation into heat, while in particularly the direct improvement of the efficiency rate of the seasonal heat storage. The application according to the described invention includes full (4) or half linear lamella structures (5), which are located above the filling heat exchangers (1) or beneath the drain heat exchangers (2) enabling focused and limited Reyleigh-Bernard convection (10). This prevents horizontal mixing of water (6) and the guaranteed inducing of a maximum thermally-layered water in the storage tank, which provides a 30 % enhanced efficiency rate in gathering and releasing heat from the storage tank compared to any existing systems. There is an additional description of the storage tank with a bendable water- nonpermeable foil (16), which in a simple way solves the problem of water expansion due to temperature changes (17) and thus pressure equalisation.

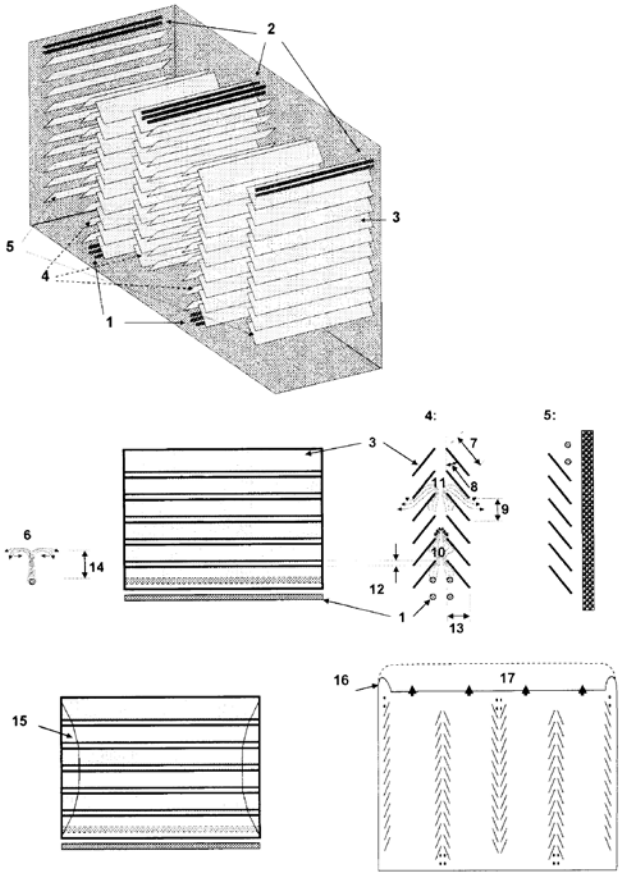

Physical Sciences

Physical and exact sciences, Energy

Energy, Industrial products

https://worldwide.espacenet.com/patent/search/family/039889202/publication/SI22504A?q=si22504

UIL RS

Metamaterials and Resonant Materials Based on Liquid Crystal Dispersions of Colloidal Particles and Nanoparticles

EP1975656B1

30. 3. 3007

Jožef Stefan Institute [SI], University Of Ljubljana [SI]

Igor Muševič, Miha Ravnik, Miha Škarabot, Slobodan Žumer

Metamaterials and Resonant Materials Based on Liquid Crystal Dispersions of Colloidal Particles and Nanoparticles

The subject of the invention is a class of metamaterials and/or resonant materials and the method of their production, whereby nanoparticles (11) are segregated in the regions of topological defects (13), which are formed by inclusion of colloidal particles (12) in a layer of a nematic liquid crystal (14). The nanoparticles (11) are localized in the vicinity of topological defects (13), which can themselves be localized or delocalized, whereas the size of the nanoparticles (11) is smaller than the size of the colloidal particles (12), preferably of the size of the diameter of the defect (13).

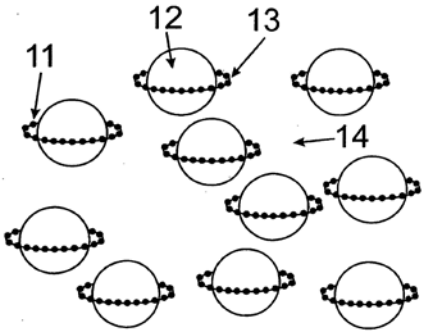

Physical Sciences

Physical and exact sciences

Industrial products

https://worldwide.espacenet.com/patent/search/family/038434451/publication/EP1975656B1?q=EP1975656B1

EPO

Extended patent application

DK1975656T3

30. 3. 2007

Jožef Stefan Institute [SI], University of Ljubljana [SI]

Igor Muševič, Miha Ravnik, Miha Škarabot, Slobodan Žumer

Metamaterialer og resonansmaterialer baseret p flydende krystaldispersioner af kolloidale partikler og nanopartikler [DA]

https://worldwide.espacenet.com/patent/search/family/038434451/publication/DK1975656T3?q=pn%3DDK1975656T3

Extended patent application

AT512379T

30. 3. 2007

Jožef Stefan Institute [SI], University of Ljubljana [SI]

Igor Muševič, Miha Ravnik, Miha Škarabot, Slobodan Žumer

Metamaterialien und Resonanzmaterialien auf der Basis von Flüssigkristalldispersionen von Kolloidalen Teilchen und Nanoteilchen

https://worldwide.espacenet.com/patent/search/family/038434451/publication/AT512379T?q=pn%3DAT512379T

Metamaterials and Resonance Materials Based On Composites of Liquid Crystal Colloids and Nano Particles

SI22508A

30. 3. 2007

Jožef Stefan Institute [SI], University of Ljubljana, Faculty of Mathematics and Physics [SI]

Miha Škarabot, Igor Muševič, Miha Ravnik, Slobodan Žumer

Metamateriali in resonančni materiali na osnovi kompozitov tekočekristalnih koloidov in nanodelcev [SL], Metamaterials and Resonance Materials Based on Composites of Liquid Crystal Colloids and Nano Particles [EN]

Subject of the invention are metamaterials and/or resonance materials based on composites of liquid crystal colloids and nano particles as well as the procedure of their manufacture. According to the invention the nano particles (11) are segregated in the area of topological defects (13) created by colloid parts (12) integrated in the liquid crystal layer (14). The nano particles (11) are localised in the vicinity of topological defects (13) which are either localised or delocalised where the size of the nano particles (11) is smaller from the size of colloid particles (12) preferably in the size of the topological defect (13).

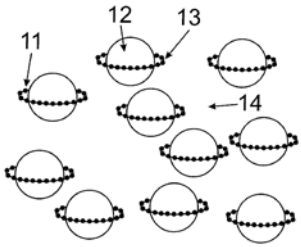

Physical Sciences

Physical and exact sciences

Industrial products

https://worldwide.espacenet.com/patent/search/family/039889206/publication/SI22508A?q=si22508

UIL RS

Method and Device for Modification of Implants and Artificial Veins Made of PET Polymer

SI22608A

18. 10. 2007

Jožef Stefan Institute [SI]

Uroš Cvelbar, Ita Junkar, Miran Mozetič, Simona Strnad, Alenka Vesel

Metoda in naprava za modifikacijo implantatov in umetnih žil iz PET polimera [SL], Method and Device for Modification of Implants and Artificial Veins Made of PET Polymer [EN]

The subject of invention is a method and device for treatment of the interior surface of a tube made of a polyethyleneterephtalate (PET) polymer which is used for implants into live organisms, e.g. artificial veins. The procedure comprises laying the polymer implant or artificial vein into a vacuum chamber, evacuation of the system and treatment with neutral oxygen atoms. A dose of atoms received by the artificial vein amounts to between 10 exp 18 m exp (-2) and 10 exp 26 m exp (-2), yet preferentially between 10 exp 20 m exp (-2) and 10 exp 22 m exp (-2). This kind of treatment enables saturation of the artificial vein with polar functional groups, which leads to the increase of the surface energy of PET material and, consequently, to the improvement of adhesion of biocompatible coatings. The subject of the invention is also a device which enables such kind of treatment.

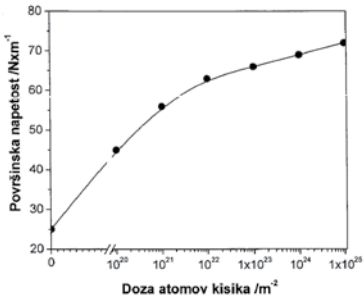

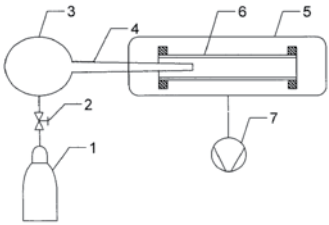

Physical Sciences

Physical and exact sciences

Medical / health related

https://worldwide.espacenet.com/patent/search/family/040229684/publication/SI22608A?q=si22608

UIL RS

Extended patent application

WO2009051567A3

1. 10. 2008

Uroš Cvelbar [SI], Jožef Stefan Institute [SI], Ita Junkar [SI], Miran Mozetič [SI], Simona Strnad [SI], Alenka Vesel [SI]

Uroš Cvelbar, Ita Junkar, Miran Mozetič, Simona Strnad, Alenka Vesel

Method And Device For The Modification Of Implants And Synthetic Blood Vessels

https://worldwide.espacenet.com/patent/search/family/040229684/publication/WO2009051567A3?q=WO2009051567A3

Polyester Biomaterial with Surface Having Antithrombotic Properties and Procedure of Its Manufacture

SI22467A

19. 4. 2007

Tea Indest [SI], Simona Strnad [SI]

Renate Dworczak, Tea Indest, Janne Laine, Karin Stana Kleinschek, Simona Strnad, Alenka Vesel

Poliestrski biomaterial s površino, ki ima antitrombotične lastnosti, in postopek njegove izdelave [SI], Polyester Biomaterial with Surface Having Antithrombotic Properties and Procedure of Its Manufacture [EN]

The subject of invention is a polyester biomaterial, preferably a polyethylene terephtalate material, treated so that a lining is applied to the polyester biomaterial, consisting essentially of at least two layers, namely of the first layer formed by chitosan, serving as the underlayer for binding the second layer applied to it, and of the second layer formed by sulphated polysaccharide with anticoagulative properties, preferentially fucoidan. The invention refers also to the manufacturing procedure of thus surface-modified polyester biomaterial. The polyester biomaterial treated in the sense of the invention, particularly the polyethylene terephtalate material, is appropriate for manufacture of implantates such as blood vessel implants, blood vessel bandages, blood vessel stents, catheters and cardiac valves. The subject of invention is also the application of fucoidan for adsorption onto the surface of synthetic polymeric biomaterials or for recoating of polyester biomaterials appropriate for the manufacture of implantates in order to create a surface with anticoagulative and thus antithrombotic properties on the implantate.

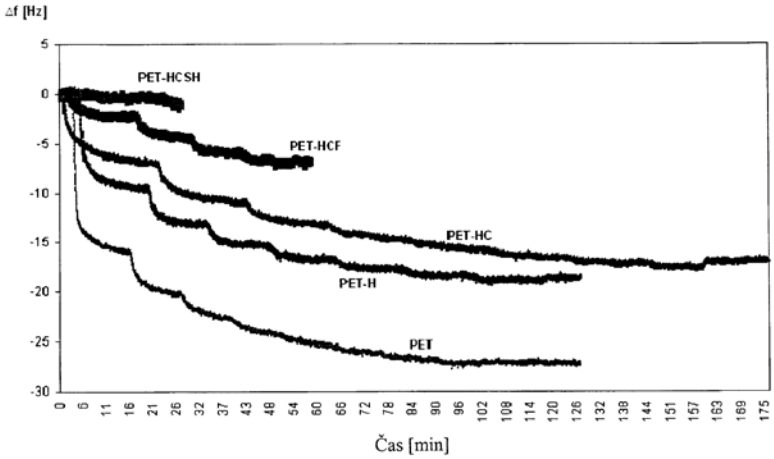

Physical Sciences

Physical and exact sciences, Biological sciences

Medical / health related

https://worldwide.espacenet.com/patent/search/family/039889174/publication/SI22467A?q=si22467

UIL RS

Laser System for Medical and Cosmetic Applications

EP2030586B1

1. 9. 2007

Fotona d. d. [SI]

Matjaž Lukač, Karolj Nemeš

Laser System for Medical and Cosmetic Applications

The invention concerns a laser system (1) for medical and cosmetic applications. The laser system (1) comprises an optical delivery system (2) for guiding a laser beam (3) to a target surface (4). The optical delivery system (2) has an external optical element (5) facing toward the target surface (4). A mechanical filter in the form of a protective screen (6) is arranged at the exit side of the external optical element (5) for shielding the external optical element (5) from particles (7) ejected by the laser beam (3).

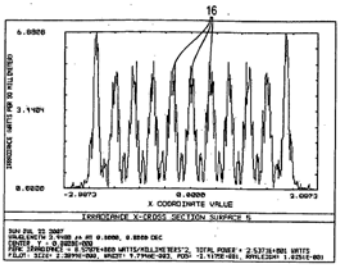

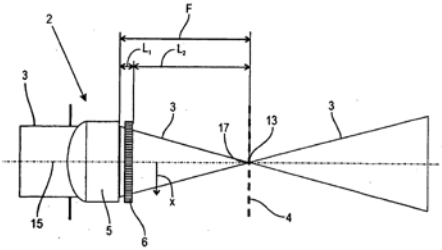

Physical Sciences

Physical and exact sciences

Medical / health related

https://worldwide.espacenet.com/patent/search/family/038920858/publication/EP2030586B1?q=EP2030586B1

EPO

Extended patent application

US2009059994A1

31. 8. 2008

Fotona d. d. [SI]

Matjaž Lukač, Karolj Nemeš

Laser System for Medical and Cosmetic Applications

https://worldwide.espacenet.com/patent/search/family/038920858/publication/US2009059994A1?q=US2009059994A1

2006

Multistable Liquid Crystal Device

EP1927885B1

28. 11 2006

Stichting Katholieke Universiteit [NL]

Igor Muševič, Miha Škarabot, Marko Uplaznik, Sergiy Lazarenko Volodymyrovych, Maria Rasing Theodorus Henricus

Multistable Liquid Crystal Device

This invention relates to a multistable liquid crystal device (1) is provided with a front panel (2), a back panel (4), one of which is provided with a profiled inside surface (16) containing a plurality of recesses (18). The recesses are formed by a bottom surface (20) and a plurality of sidewalls (22,24,26,28), the liquid crystal device further being provided with liquid crystal molecules (8), the liquid crystal molecules being located between the front panel and the back panel and some of the liquid crystal molecules being contained in the recesses. Due to a surface/liquid-crystal-molecule interaction, one of the sidewalls of the recesses predetermines first alignment of the liquid crystal molecules contained in the recess, and another of said sidewalls of the recess predetermines a second alignment of liquid crystal molecules contained in the recess.

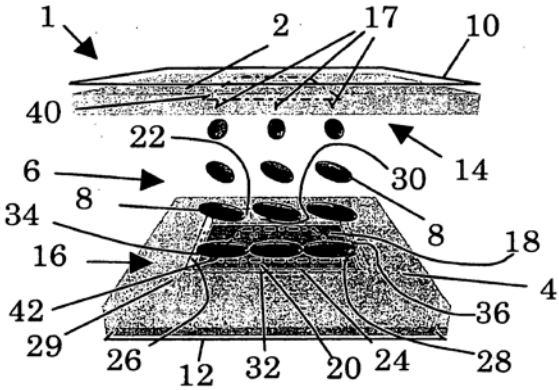

Physical Sciences

Physical and exact sciences

Other electronics related, Other

https://worldwide.espacenet.com/patent/search/family/037949701/publication/EP1927885B1?q=EP1927885B1

EPO

Extended patent application

AT518165T

28. 11. 2006

Stichting Katholieke Universiteit [NL]

Igor Muševič, Miha Škarabot, Marko Uplaznik, Sergiy Lazarenko Volodymyrovych, Maria Rasing Theodorus Henricus

Multistabile Flüssigkristallvorrichtung

https://worldwide.espacenet.com/patent/search/family/037949701/publication/AT518165T?q=AT518165T

Field Microscope for The Examination of Emission Areas on the Surface of Cold Flat Cathodes

SI22425A

2. 11. 2006

Jožef Stefan Institute [SI]

Mihael Kocmur, Vincenc Nemanič, Bojan Zajec, Marko Žumer

Poljski mikroskop za preiskavo emisijskih mest napovrĺ ini ravnih hladnih katod [SL], Field Microscope for The Examination of Emission Areas on the Surfaceof Cold Flat Cathodes [EN]

Subject of the invention is a field microscope for the examination of emission areas on the surface of cold flat cathodes. This is a new instrument which enables magnitude measurements of the emitted electric current originating from the individual emission spot on the surface of a cold

cathode and at the same time its monitoring regarding emission current at the level of atomic resolution. The microscope according to the invention is characterised in that the examined flat cold cathode (6) at zero potential is located across the hand of the manipulating device (7) which enables XYZ shifting of the cathode within the container, where prior to the measurement an ultra-high vacuum has been generated, transmitting electrons from individual emitters in the direction of the hollow metal cone (8) which is terminated on top by a shutter inside a ball-shaped cap (9) on the positive potential being by an electric field focused on a flat luminescent screen (10) featuring an equal or higher positive potential where these electrons are monitored or captured by a CCD camera (11) as an emission sample. The advantage of the microscope according to the invention is that it creates a uniform electronic field only in the very proximity of the screen which is located on top of the ball-shaped cap where the electrons are directed inside a weak electric field towards the screen. The electric field with a radial distance from the screen decreases which contributes to a favourable ratio between the emitted and screen- focused current. By moving the sample on a selected distance Z, an XY display of the distribution of the emission locations across an extensive cathode can be created.

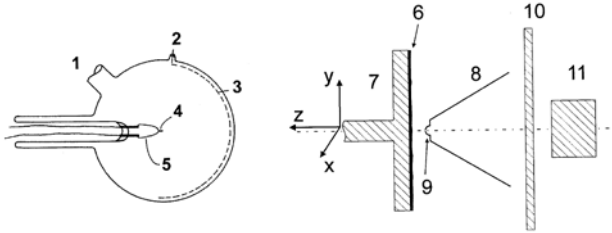

Physical Sciences

Electronics, IT and telecoms, Physical and exact sciences, Measurements and standards

Industrial products, Other electronics related

https://worldwide.espacenet.com/patent/search/family/039575715/publication/SI22425A?q=si22425

UIL RS

Method and Device for Selective Etching of Composite Materials with Laser Ablation

SI22288A

6. 6. 2006

Jožef Stefan Institute [SI]

Uroš Cvelbar, Nikša Krstulović, Slobodan Milošević, Miran Mozetič

Metoda in naprava za selektivno jedkanje kompozitnih materialov z lasersko ablacijo [SL], Method and Device for Selective Etching of Composite Materials with Laser Ablation [EN]

The subject of invention is a method for surface treatment of composite materials having a polymer matrix and a device with which selective etching of a composite surface is carried out. The method is based on surface treatment of a composite with a jet of energetic particles, first of all a bundle of laser rays, i.e. with laser ablation. Polymer is selectively partly or completely removed from the surface and fillers are left almost intact. Such changes of surface lead to the essential change of surface properties, first of all adhesion and porosity of various coatings on a composite.

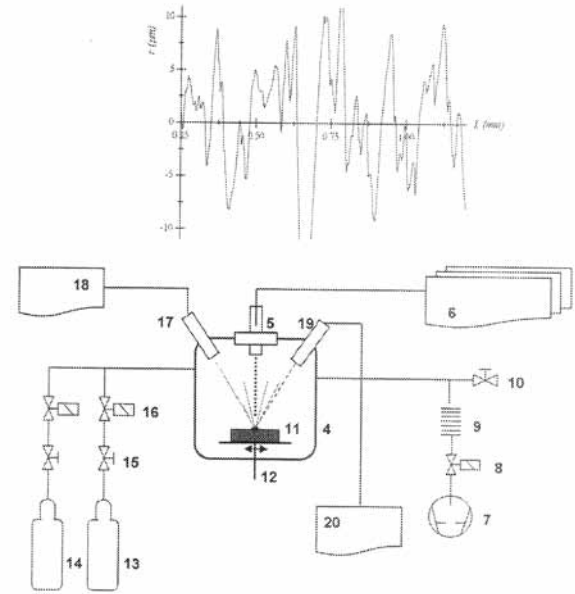

Physical Sciences

Industrial manufacturing, material and transport, Physical and exact sciences

Industrial products, Other

https://worldwide.espacenet.com/patent/search/family/038547037/publication/SI22288A?q=si22288

UIL RS

Extended patent application

WO2007142610A1

22. 5. 2007

Jožef Stefan Institute [SI], Uroš Cvelbar [SI], Nikša Krstulović [HR], Slobodan Milošević [HR], Miran Mozetič [SI]

Uroš Cvelbar, Nikša Krstulović, Slobodan Milošević, Miran Mozetič

Method and Device for Selective Etching of Composite Materials with Laser Ablation

https://worldwide.espacenet.com/patent/search/family/038547037/publication/WO2007142610A1?q=WO2007142610A1

Device for Measurement of Flow Rate or Speed of Fluids or Gasses with Several Windows

SI22314A

22. 5. 2006

Jožef Stefan Institute [SI]

Lukan Alessandro

Naprava za meritev pretoka ali hitrosti kapljevin ali plinov z več okni [SL], Device for Measurement of Flow Rate or Speed of Fluids or Gasses with Several Windows [EN]

The novelty of this invention is the installation of additional observation windows into a flow rate meter of type „Float Type Flowmeter“. The device

according to the invention can be executed as a „Float Type Flowmeter“ from optional, measure and- and environment-friendly materials without contacts of control elements with the observed substance, yet contrary to other flow rate meters, also quite different flow rate ranges can be measured as well as valve tightness controlled. The submitted invention enables a long-term undisturbed direct measurement of flow rate, and indirectly, also of speed or power of quite different magnitudes. Te device according to the invention can be executed from optional, measurand- and environment-friendly materials and, if needed, without contacts of control elements with the observed substance.

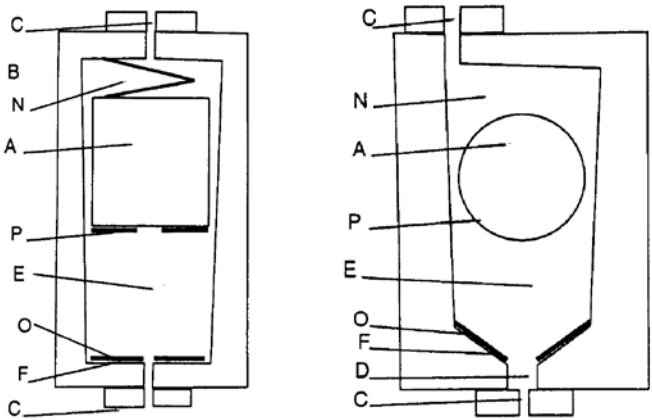

Physical Sciences

Physical and exact sciences, Measurements and standards

Industrial products, ther

https://worldwide.espacenet.com/patent/search/family/038871290/publication/SI22314A?q=si22314

UIL RS

Field Microscope for the Examination of Emission Areas on the Surfaceof Cold Flat Cathodes

SI22425A

2. 11. 2006

Jožef Stefan Institute [SI]

Mihael Kocmur, Vincenc Nemanič, Bojan Zajec, Marko Žumer

Poljski mikroskop za preiskavo emisijskih mest napovrĺ ini ravnih hladnih katod [SI], Field Microscope for the Examination of Emission Areas on the Surfaceof Cold Flat Cathodes [EN]

Subject of the invention is a field microscope for the examination of emission areas on the surface of cold flat cathodes. This is a new instrument which enables magnitude measurements of the emitted electric current originating from the individual emission spot on the surface of a cold cathode and at the same time its monitoring regarding emission current at the level of atomic resolution. The microscope according to the invention is characterised in that the examined flat cold cathode (6) at zero potential is located across the hand of the manipulating device (7) which enables XYZ shifting of the cathode within the container, where prior to the measurement an ultra high vacuum has been generated, transmitting electrons from individual emitters in the direction of the hollow metal cone (8) which is terminated on top by a shutter inside a ball-shaped cap (9) on the positive potential being by an electric field focused on a flat luminescent screen (10) featuring an equal or higher positive potential where these electrons are monitored or captured by a CCD camera (11) as an emission sample. The advantage of the microscope according to the invention is that it creates a uniform electronic field only in the very proximity of the screen which is located on top of the ball-shaped cap where the electrons are directed inside a weak electric field towards the screen. The electric field with a radial distance from the screen decreases which contributes to a favourable ratio between the emitted and screen- focused current. By moving the sample on a selected distance Z, an XY display of the distribution of the emission locations across an extensive cathode can be created.

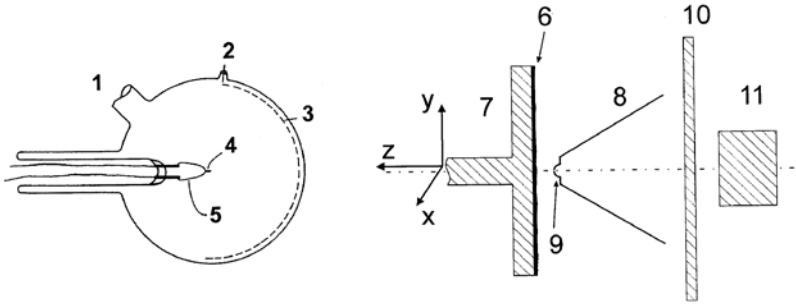

Physical Sciences

Physical and exact sciences, Electronics, IT and telecoms, Measurements and standards

Other electronics related, Industrial products

https://worldwide.espacenet.com/patent/search/family/039575715/publication/SI22425A?q=si22425

UIL RS

2005

Device and Procedure of Flow Detection in Metal Capillary Tubes

SI22174A

16. 12. 2005

Jožef Stefan Institute [SI]

Drago Brodnik, Matej Lipoglavšek, Zdravko Rupnik

Naprava in postopek detekcije pretoka v kovinskih kapilarah [SI], Device and Procedure of Flow Detection in Metal Capillary Tubes [EN]

Subject of the invention are a device and procedure of flow detection of preferably cooling liquid in metal capillary tubes of a refrigerator. The device according to the invention consists of measurement pliers (10) with an upper jaw (11) and a lower jaw (12). The upper jaw (11) carries sensors (4, 5) and the first electrode (18) of the heat supply element (3), while the lower jaw (12) supports the other electrode (19) of the heat supply element (3). The enclosures (22) and (23) feature on its lower side a longitudinal groove so that a capillary tube (1) fits into it, and so that the sensors (4, 5) are fitted on top of it along with the electrode (18). The electrode (19) is made from the kanthal AF resistive alloy and has a pointed shape. The surface by which the electrode (19) fits the capillary tube (1) is smaller from the surface of the fit of the copper electrode (18). When through the closed circuit consisting of the electrode (18) - metal capillary tube (1) - electrode (19) from the transformer, controlled by unit (9) an alternating current of 20 to 50 A is sent, this mainly heats the electrode (19) with a higher resistivity and thus the capillary tube (1) wall. The sensors (4, 5) measure the temperature and feed the data to the control unit (9).

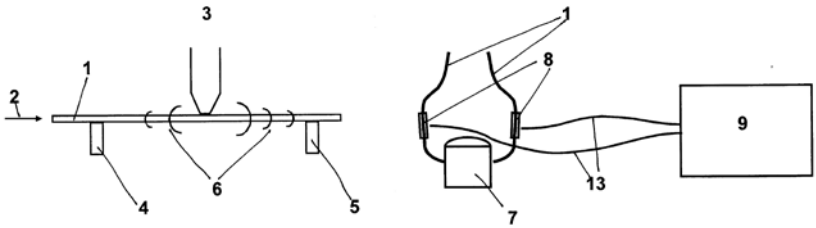

Physical Sciences

Physical and exact sciences, Electronics, IT and telecoms

Industrial products, Energy, Other

https://worldwide.espacenet.com/patent/search/family/038219056/publication/SI22174A?q=si22174

UIL RS

Liquid Crystal Switchable Light Filter With Adjustable Contrast and Wide Visual Angle

SI22066A

20. 5. 2005

Jožef Stefan Institute [SI]

Bojan Marin, Janez Pirš, Silvija Pirš, Andrej Vrečko

Tekoče kristalni preklopni svetlobni filter s spremenljivim kontrastom in širokim vidnim kotom [SL], Liquid Crystal Switchable Light Filter With Adjustable Contrast and Wide Visual Angle [EN]

The invention describes a new concept of TK switchable light filters which generate high level blanking, which is continuously adjustable under the control of an electric field (up to at least 100.000), optimised/symmetrically balanced for the incidence of light along the perpendicular of the TK switcher level. The new TK switchable light filter also features little dependence from the incidence of light under angles smaller than 90 degrees within the 15 degrees cone as stipulated by the EN 379 international safety standard for personal protection equipment. According to the invention the problem is solved by a modification of the general TN principle of TK displays with a high rotation angle of the TK structure, which enables not only the adjustment of the curve featuring the dependence of light permeability from the control voltage to the specific requirements of the control electronics but also symmetrical balance of the double-refraction properties and thus a high level of angle compensation of the switchable light filter.

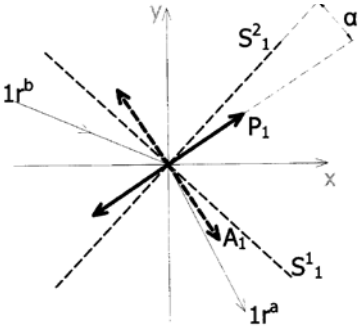

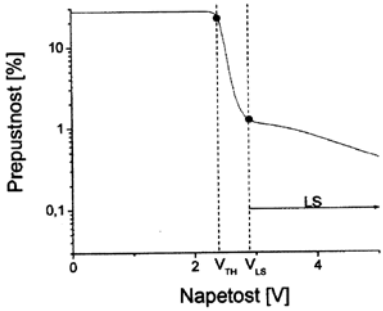

Physical Sciences

Physical and exact sciences, Protecting man and environment

Other electronics related, Other

https://worldwide.espacenet.com/patent/search/family/036694475/publication/SI22066A?q=si22066

UIL RS

Extended patent application

EP1883854B1

9. 5. 2006

Jožef Stefan Institute [SI]

Bojan Marin, Janez Pirš, Silvija Pirš, Andrej Vrečko

Variable Contrast, Wide Viewing Angle Liquid Crystal Light Attenuation Filter

https://worldwide.espacenet.com/patent/search/family/036694475/publication/EP1883854B1?q=EP1883854B1

Extended patent application

WO2006122679A1

9. 5. 2006

Jožef Stefan Institute [SI], Bojan Marin [SI], Janez Pirš [SI], Silvija Pirš [SI], Andrej Vrečko [SI]

Bojan Marin, Janez Pirš, Silvija Pirš, Andrej Vrečko

Variable Contrast, Wide Viewing Angle Liquid Crystal Light Attenuation Filter

https://worldwide.espacenet.com/patent/search/family/036694475/publication/WO2006122679A1?q=si22066

Extended patent application

US8026998B2

9. 5. 2006

Jožef Stefan Institute [SI]

Bojan Marin, Janez Pirš, Silvija Pirš, Andrej Vrečko

Variable Contrast, Wide Viewing Angle Liquid Crystal Light Attenuation Filter

https://worldwide.espacenet.com/patent/search/family/036694475/publication/US8026998B2?q=%20US8026998B2

Small Field Intensity Modulated Radiation Therapy Machine

US7519149B2

27. 3. 2006

Wisconsin Alumni Research Foundation [US]

Stewart J. Becker, Robert Jeraj, Thomas R. Mackie

Small Field Intensity Modulated Radiation Therapy Machine

This invention relates to a small field radiation therapy machine having an aperture diameter of 30 cm or less providing improved ray definition for specialized treatment of portions of the human body such as head a breast.

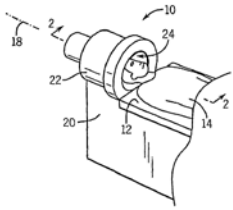

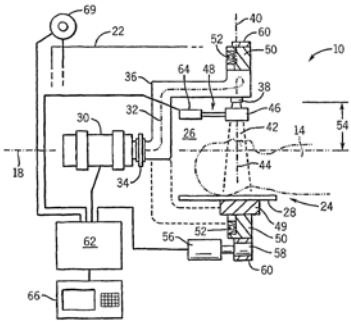

Physical Sciences

Physical and exact sciences, Biological sciences

Medical / health related

https://worldwide.espacenet.com/patent/search/family/036587032/publication/US7519149B2?q=US7519149B2

US

Extended patent application

AT507878T

27. 3. 2006

Wisconsin Alumni Research Foundation [US]

Stewart J. Becker, Robert Jeraj, Thomas R. Mackie

Gerät Für Intensitätsmodulierte Kleinraumbestrahlungstherapie

https://worldwide.espacenet.com/patent/search/family/036587032/publication/AT507878T?q=US7519149B2

Extended patent application

EP1885452B1

27. 3. 2006

Wisconsin Alumni Research Foundation [US]

Stewart J. Becker, Robert Jeraj, Thomas R. Mackie

Small Field Intensity Modulated Radiation Therapy Machine

https://worldwide.espacenet.com/patent/search/family/036587032/publication/EP1885452B1?q=%20EP1885452B1

Extended patent application

WO2006107637A1

27. 3. 2006

Becker Stewart J [US], Robert Jeraj [US], Thomas R. Mackie [US], Wisconsin Alumni Research Foundation [US]

Stewart J. Becker, Robert Jeraj, Thomas R. Mackie

Small Field Intensity Modulated Radiation Therapy Machine

https://worldwide.espacenet.com/patent/search/family/036587032/publication/WO2006107637A1?q=pn%3DWO2006107637A1

2004

Triple Resonance Enhanced Nuclear Quadropole Resonance Detection of TNT and Other Explosives

SI21715A

12. 1. 2004

Jožef Stefan Institute [SI]

Tomaž Apih, Robert Blinc, Gojmir Lahajnar, Janez Seliger

Trojnoresonančna ojačena jedrska kvadrupolna resonančna detekcija TNT in drugih eksplozivov [SL], Triple Resonance Enhanced Nuclear Quadropole Resonance Detection of TNT and Other Explosives [EN]

The subject of the invention is a new triple-resonance polarization-enhanced NQR method for the detection of trinitrotoluene (TNT) and other explosives as well as narcotics and drugs containing low-frequency NQR nuclei, such as 14N nuclei, in addition to high-frequency nuclei such as chlorine, bromine, 17 O. The invention based on the use of high-frequency nuclei, such as chlorine, bromine, or 17 O, to polarize protons through level crossing or „solid effect" and to detect a low-frequency NQR (e.g., 14 N) signal by pulsed NQR at a distance. Compared to the previously proposed quadrupole-quadrupole polarization amplified technique, the new method avoids the problem of slow spin diffusion during polarization in a 14 N quadrupole system by replacing double resonance with a triple resonance scheme. In this way, the spin diffusion of the polarization gain takes place in the proton system and not in the 14 N system.

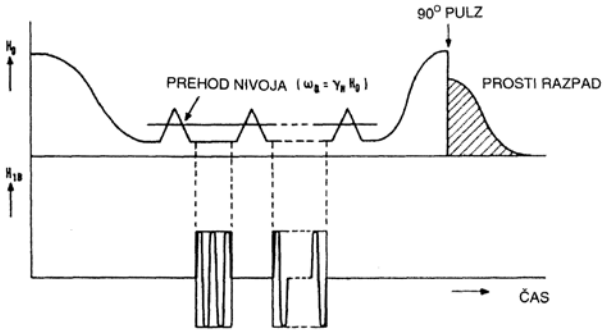

Physical Sciences

Physical and exact sciences, Protecting man and environment

Industrial products, Other

https://worldwide.espacenet.com/patent/search/family/034882412/publication/SI21715A?q=si21715

UIL RS

Illumination of the Electromagnetic Display Panels

SI21767A

28. 4. 2004

Iskra Mehanizmi d. d. [SI]

Milan Bavec, Franc Justin, Silvano Medizza, Janez Pirš, Silvija Pirš, Janez Ropret

Osvetljevanje elektromagnetnega prikazovalnika [SL], Illumination of the Electromagnetic Display Panels [EN]

A new concept of illumination of the electromagnetic display panels is described using invisible UV light illumination of the display panels into low ambient light conditions. Such a solution is possible, if one uses UV fluorescent dyes in the paints or plastic material for the reflective surface of the selected pixel element instead of the regular reflective ones. The said dyes absorb the invisible near UV light and upon absorbing it reemit the light in the visible range. The described display panel illumination concept results in excellent contrast, as there is no visible light scattering from the background or protective display panel top covers, which in turn result in haze and glare. Furthermore unlike with electromagnetic display panels, using built-in light sources imbedded in ich pixel element (i.e.: LED,...), the appearance/perception of the display characters (shape, geometry) as well as angular visibility remain unchanged in the hihh as well as in low or „dark“ ambient light conditions.

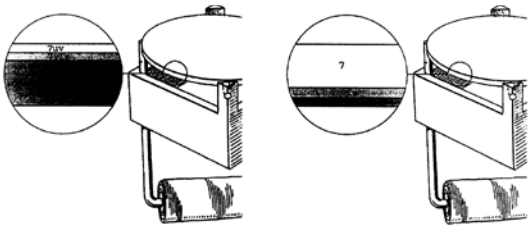

a b

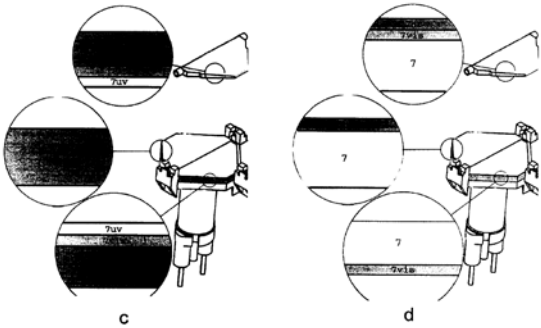

Physical Sciences

Electronics, IT and telecoms

Computer related

https://worldwide.espacenet.com/patent/search/family/034935032/publication/SI21767A?q=si21767

UIL RS

Extended patent application

CN1691094A

31. 12. 2004

Iskra Mehanizmi d. d. [SI]

Milan Bavec, Franc Justin, Silvano Medizza, Janez Pirš, Silvija Pirš, Janez Ropret

Electromagnetic Display Panel

https://worldwide.espacenet.com/patent/search/family/034935032/publication/CN1691094A?q=%20CN1691094A

Extended patent application

EP1591984A3

12. 4. 2005

Iskra Mehanizmi d. d. [SI]

Milan Bavec, Franc Justin, Silvano Medizza, Janez Pirš, Silvija Pirš, Janez Ropret

Electromagnetic Display Panel

https://worldwide.espacenet.com/patent/search/family/034935032/publication/EP1591984A3?q=EP1591984A3

Extended patent application

RU2289168C2

22. 11. 2004

Iskra Mehanizmi d. d. [SI]

Milan Bavec, Franc Justin, Silvano Medizza, Janez Pirš, Silvija Pirš, Janez Ropret

Electromagnetic Display Panel

https://worldwide.espacenet.com/patent/search/family/034935032/publication/RU2289168C2?q=RU2289168C2

Electromagnetic Display Panel

SI21768A

28. 4. 2004

Iskra Mehanizmi d. d. [SI]

Milan Bavec, Franc Justin, Janez Pirš, Janez Ropret,

Elektromagnetni prikazovalnik [SL], Electromagnetic Display Panel [EN]

This invention relates to a novel, low production cost construction, of an electromagnetic display, which allows for the significant reduction of the fabrication costs. The construction is adapted to a batch processing of the electromagnetic display panel pixels, which can optionally use novel electromagnetic driving as well as illumination concept. According to the described construction concept the display pixels are integrated into smaller functional groups - segments, within which all static parts of the display pixels are joined in a monolithic block, which can be mass-produced in an automated process. Due to the monolithic design the number of constituent parts is reduced to minimum and the mechanical tolerances can be kept tighter. This in turn allows the other operations like solenoid winding, pixel flaps insertion, contacting/mounting pins injection etc. to be performed simultaneously for all pixel elements joint in the said basic display segment. The described display panel design also applies a novel concept of display pixel illumination in low ambient light conditions based on the use of UV light luminescent paints replacing the discrete pixel illumination by light sources associated with each display pixel (For example: LED,...) as well as novel electromagnetic display pixel driving, reducing the crosstalk between neighbouring display pixel based on the use of plasto-magnets built-in in the display flaps during the injection molding process.

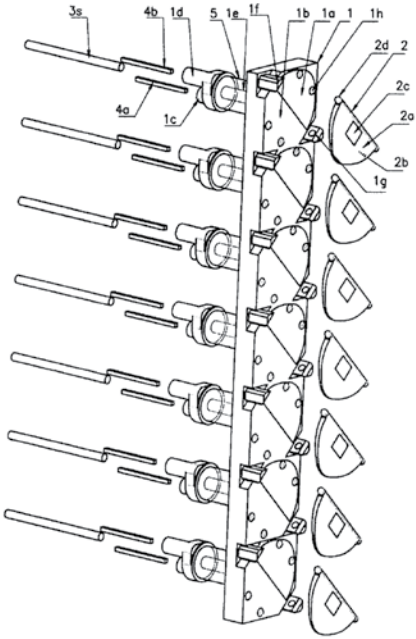

Physical Sciences

Electronics, IT and telecoms

Computer related

https://worldwide.espacenet.com/patent/search/family/034935033/publication/SI21768A?q=si21768

UIL RS

Extended patent application

CN1691096A

7. 2. 2005

Iskra Mehanizmi d. d. [SI]

Milan Bavec, Franc Justin, Janez Pirš, Janez Ropret

Electromagnetic Display Panel

https://worldwide.espacenet.com/patent/search/family/034935033/publication/CN1691096A?q=pn%3DCN1691096A

Extended patent application

EP1591985A3

12. 4. 2005

Iskra Mehanizmi d. d. [SI]

Milan Bavec, Franc Justin, Janez Pirš, Janez Ropret

Electromagnetic Display Panel

https://worldwide.espacenet.com/patent/search/family/034935033/publication/EP1591985A3?q=EP1591985A3

Extended patent application

RU2004134001A

22. 11. 2004

Iskra Mehanizmi d. d. [SI]

Milan Bavec, Franc Justin, Janez Pirš, Janez Ropret

Electromagnetic Display Panel

https://worldwide.espacenet.com/patent/search/family/034935033/publication/RU2004134001A?q=pn%3DRU2004134001A

Method for Improving the Electrical Connection Properties of the Surface of a Product Made from a Polymer-Matrix Composite

EP1828434B1

16. 9. 2004

Uroš Cvelbar [SI], Kolektor Group d. o. o. [SI], Miran Mozetič [SI]

Uroš Cvelbar, Miran Mozetič

Method for Improving the Electrical Connection Properties of the Surface of a Product Made from a Polymer-Matrix Composite

The present invention refers to a method for improving the electrical connection properties of the surface of a product made from a polymer-matrix composite comprising a filler comprising the following steps: -heating of the surface of the product to a first treatment temperature above the ambient temperature; - first plasma treatment of the surface whereby removal of surface polymer and uncovering of filler is effected by oxygen radicals; - cooling down of the plasma treated surface of the product to a second treatment temperature below the first treatment temperature; - second plasma treatment of the surface created by the first plasma treatment whereby activation of the surface is effected by oxygen radicals; - depositing a metallization on the surface created by the second plasma treatment.

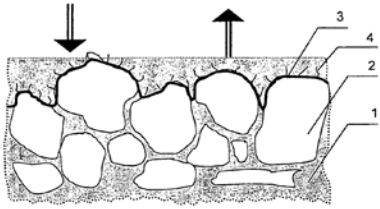

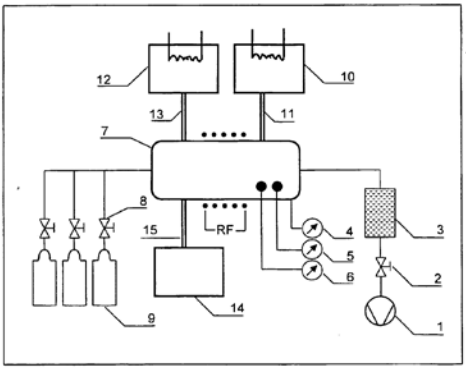

Physical Sciences

Other industrial technologies, Physical and exact sciences

Industrial products, Other

https://worldwide.espacenet.com/patent/search/family/034958618/publication/EP1828434B1?q=%20EP1828434B1

EPO

Extended patent application

AT384147T

16. 9. 2004

Kolektor Group d. o. o. [SI]

Uroš Cvelbar, Miran Mozetič

Verfahren Zur Verbesserung Der Elektrischen Verbindungseigenschaften Der Oberfläche Eines Produkts Aus Einem Polymer-Matrix- Verbundwerkstoff

https://worldwide.espacenet.com/patent/search/family/034958618/publication/AT384147T?q=pn%3DAT384147T

Extended patent application

BRPI0419052A

16. 9. 2004

Kolektor Group d. o. o. [SI]

Uroš Cvelbar, Miran Mozetič

Processo para aperfeiçoar as propriedades de conexão elétrica da superficie de um produto feito de um compósito de matriz polimérica

https://worldwide.espacenet.com/patent/search/family/034958618/publication/BRPI0419052A?q=pn%3DBRPI0419052A

Extended patent application

CN101023202A

16. 9. 2004

Kolektor Group d. o. o. [SI]

Uroš Cvelbar, Miran Mozetič

Method for Improving the Electrical Connection Properties of the Surface of a Product Made from a Polymer-Matrix Composite

https://worldwide.espacenet.com/patent/search/family/034958618/publication/CN101023202A?q=pn%3DCN101023202A

Extended patent application

DE602004011407T2

16. 9. 2004

Kolektor Group d. o. o. [SI]

Uroš Cvelbar, Miran Mozetič

Verfahren Zur Verbesserung Der Elektrischen Verbindungseigenschaften Der Oberfläche Eines Produkts Aus Einem Polymer-Matrix-Verbundwerkstoff

https://worldwide.espacenet.com/patent/search/family/034958618/publication/DE602004011407T2?q=pn%3DDE602004011407T2

Extended patent application

DK1828434T3

16. 9. 2004

Kolektor Group d. o. o. [SI]

Uroš Cvelbar, Miran Mozetič

Fremgangsmåde til forbedring af de elektriske forbindelsesegenskaber af overfladen af et produkt, der er fremstillet af et polymer-matrix-komposit

https://worldwide.espacenet.com/patent/search/family/034958618/publication/DK1828434T3?q=pn%3DDK1828434T3

Extended patent application

WO2006029642A1

16. 9. 2004

Kolektor Group d. o. o. [SI]

Uroš Cvelbar, Miran Mozetič

Method for Improving the Electrical Connection Properties of the Surface of a Product Made from a Polymer-Matrix Composite

https://worldwide.espacenet.com/patent/search/family/034958618/publication/WO2006029642A1?q=WO2006029642A1

Extended patent application

ES2297462T3

16. 9. 2004

Kolektor Group d. o. o. [SI]

Uroš Cvelbar, Miran Mozetič

Procedimiento para mejorar las propiedades de conexion electrica de la superficie de un producto fabricado a partir de un material compuesto de matriz polimerica.

https://worldwide.espacenet.com/patent/search/family/034958618/publication/ES2297462T3?q=pn%3DES2297462T3

Extended patent application

JP2008513599A

16. 9. 2004

Kolektor Group d. o. o. [SI]

Uroš Cvelbar, Miran Mozetič

Method for Improving the Electrical Connection Properties of the Surface of a Product Made from a Polymer-Matrix Composite

https://worldwide.espacenet.com/patent/search/family/034958618/publication/JP2008513599A?q=pn%3DJP2008513599A

Extended patent application

US2007286964A1

15. 3. 2007

Kolektor Group d. o. o. [SI]

Uroš Cvelbar, Miran Mozetič

Method for Improving the Electrical Connection Properties of the Surface of a Product Made from a Polymer-Matrix Composite

https://worldwide.espacenet.com/patent/search/family/034958618/publication/US2007286964A1?q=pn%3DUS2007286964A1

Procedure and Device for Measuring Ultrahigh Vacuum

SI21714A

23. 2. 2004

Jožef Stefan Institute [SI]

Alenka Vesel, Miran Mozetič

Postopek in naprava za merjenje ultravisokega vakuuma [SL], Procedure and Device for Measuring Ultrahigh Vacuum [EN]

The invention relates to a method and a device for measuring ultrahigh vacuum and, more particularly, to a method for measuring ultrahigh vacuum with an ultrahigh vacuum cold cathode pressure gauge, and to an ultrahigh vacuum cold cathode pressure gauge. The pressure gauge according to the invention operates at a voltage that varies with pressure in such a way that the ion current is maintained at its maximum value at all times. The method for measuring ultrahigh vacuum by means of an ultrahigh vacuum cold cathode pressure gauge is characterized in that the voltage-controlled source (3) preliminarily scans the entire voltage range, preferably between 1 kV and 12 kV, in a short time, and subsequently sets the source to the voltage, at which the current was at its maximum value, or that, alternatively, the voltage-controlled source (3), based on the calibration of the gauge, sets the voltage, for a given pressure, to the value that has been previously stored as optimal. The device for measuring

ultrahigh vacuum, is characterized in that the anode (1) of the pressure gauge cell is connected to a voltage-controlled source (3) providing a varying voltage.

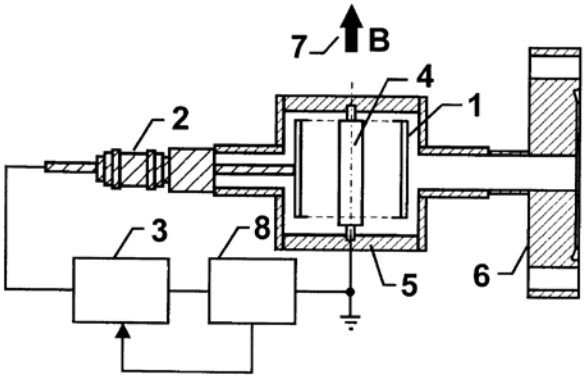

Physical Sciences

Physical and exact sciences, Other industrial technologies

Industrial products, Other

https://worldwide.espacenet.com/patent/search/family/034882433/publication/SI21714A?q=si21714

UIL RS

Extended patent application

WO2005080932A1

26. 1. 2005

Jožef Stefan Institute [SI], Alenka Vesel [SI], Miran Mozetič [SI]

Miran Mozetič, Alenka Vesel

Method and Device for Measuring Ultrahigh Vacuum

https://worldwide.espacenet.com/patent/search/family/034882433/publication/WO2005080932A1?q=WO2005080932A1

Extended patent application

US7800376B2

26. 1. 2005

Jožef Stefan Institute [SI]

Alenka Vesel, Miran Mozetič

Method and Device for Measuring Ultrahigh Vacuum

https://worldwide.espacenet.com/patent/search/family/034882433/publication/US7800376B2?q=%20US7800376B2

2003

High Contrast, Wide Viewing Angle LCD Light-Switching Element

SI21526A

16. 5. 2003

Jožef Stefan Institute [SI]

Matej Bažec, Bojan Marin, Janez Pirš, Silvija Pirš, Andrej Vrečko

Visoko kontrastni tekočekristalni svetlobno preklopni element s širokim vidnim kotom [SL], High Contrast, Wide Viewing Angle LCD Light-Switching Element [EN]

The invention suggests a new concept of an LC light switching element, which allows excellent angle compensation of dimming light by using a simple c-panel with negative double-refraction in the compensation layer. The concept is based on simultaneous application of a high angle symmetrical STN LC structure (preferably 180 degrees distortion) and maximum application of one of the two inherent ways of the passing of light (preferably ordinary ray). The solution is best suited for various applications in switching light like protective welding filters, as well as multi-segment large displays, where it provides a high level of uniformity of dimming light in the closed (dark) state.

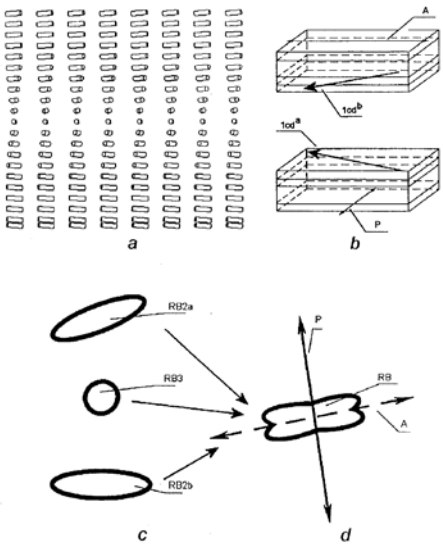

Physical Sciences

Physical and exact sciences, Protecting man and environment

Other electronics related, Industrial products

https://worldwide.espacenet.com/patent/search/family/033448813/publication/SI21526A?q=si21526

UIL RS

Extended patent application

EP1625445B1

14. 4. 2004

Jožef Stefan Institute [SI]

Matej Bažec, Bojan Marin, Janez Pirš, Silvija Pirš, Andrej Vrečko

High Contrast, Wide Viewing Angle LCD Light-Switching Element

https://worldwide.espacenet.com/patent/search/family/033448813/publication/EP1625445B1?q=EP1625445B1

Extended patent application

WO2004102265A1

14. 4. 2004

Jožef Stefan Institute [SI], Matej Bažec [SI], Bojan Marin [SI], Janez Pirš [SI], Silvija Pirš [SI], Andrej Vrečko [SI]

Matej Bažec, Bojan Marin, Janez Pirš, Silvija Pirš, Andrej Vrečko

High Contrast, Wide Viewing Angle LCD Light-Switching Element

https://worldwide.espacenet.com/patent/search/family/033448813/publication/WO2004102265A1?q=pn%3DWO2004102265A1

Extended patent application

US7420631B2

14. 4. 2004

Jožef Stefan Institute [SI]

Matej Bažec, Bojan Marin, Janez Pirš, Silvija Pirš, Andrej Vrečko

High Contrast, Wide Viewing Angle LCD Light-Switching Element

https://worldwide.espacenet.com/patent/search/family/033448813/publication/US7420631B2?q=US7420631B2

Plasma Treatment for Purifying Copper or Nickel

DE10320472A1

8. 5. 2003

Kolektor group d. o. o. [SI]

Uroš Cvelbar, Miran Mozetič

Plasmabehandlung zur Reinigung von Kupfer oder Nickel [DE], Plasma Treatment for Purifying Copper or Nickel [EN]

The invention concerns a method for treating electronic components made of copper, nickel or alloys thereof or with materials such as brass or plated therewith. The inventive method comprises the following steps which consist in: arranging the components in a treatment chamber, generating a vacuum in the treatment chamber, introducing oxygen into the treatment chamber, providing a pressure ranging between 10<-1> and 50 mbar in the treatment chamber and exciting a plasma in the chamber by means of a high frequency generator having a frequency higher than about 1 MHz, allowing the oxygen radicals to act on the components, the flow of the radicals on the surface of the components being more than 10<21> radicals per square meter per second approximately, generating a vacuum in the treatment chamber, introducing hydrogen into the treatment chamber, providing a pressure ranging between 10<-1> and 50 mbar in the treatment chamber and exciting a plasma in the chamber by means of a high frequency generator having a frequency higher than

about 1 MHz, and allowing the hydrogen radicals to act on the components, the flow of the radicals on the surface of the components being higher than 10<21> radicals per square meter per second approximately.

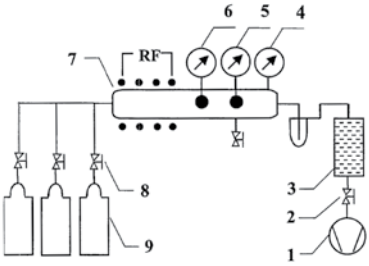

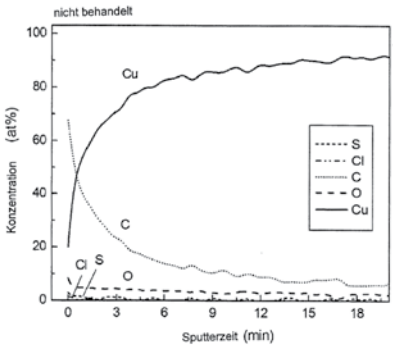

Physical Sciences

Other industrial technologies, Physical and exact sciences

Industrial products, Other

https://worldwide.espacenet.com/patent/search/family/033394282/publication/DE10320472A1?q=%20DE10320472A1

DE

Extended patent application

AT358735T

7. 5. 2004

Kolektor group d. o. o. [SI]

Uroš Cvelbar, Miran Mozetič

Plasmabehandlung zur Reinigung von Kupfer Oder Nickel

https://worldwide.espacenet.com/patent/search/family/033394282/publication/AT358735T?q=pn%3DAT358735T

Extended patent application

CN100393914C

7. 5. 2004

Kolektor group d. o. o. [SI]

Uroš Cvelbar, Miran Mozetič

Plasma Treatment for Purifying Copper or Nickel

https://worldwide.espacenet.com/patent/search/family/033394282/publication/CN100393914C?q=CN100393914C

Extended patent application

EP1620581B1

7. 5. 2004

Kolektor group d. o. o. [SI]

Uroš Cvelbar, Miran Mozetič

Plasma Treatment for Purifying Copper or Nickel

https://worldwide.espacenet.com/patent/search/family/033394282/publication/EP1620581B1?q=EP1620581B1

Extended patent application

WO2004098259A3

7. 5. 2004

Kolektor group d. o. o. [SI], Uroš Cvelbar [SI], Miran Mozetič [SI]

Uroš Cvelbar, Miran Mozetič

Plasma Treatment for Purifying Copper or Nickel

https://worldwide.espacenet.com/patent/search/family/033394282/publication/WO2004098259A3?q=WO2004098259A3

Extended patent application

JP2006525426A

7. 5. 2004

Kolektor group d. o. o. [SI]

Uroš Cvelbar, Miran Mozetič

/

https://worldwide.espacenet.com/patent/search/family/033394282/publication/JP2006525426A?q=pn%3DJP2006525426A

Extended patent application

KR20050121273A

3. 11. 2005

Kolektor group d. o. o. [SI]

Uroš Cvelbar, Miran Mozetič

Plasma Treatment for Purifying Copper or Nickel

https://worldwide.espacenet.com/patent/search/family/033394282/publication/KR20050121273A?q=pn%3DKR20050121273A

Extended patent application

MXPA05011822A

7. 5. 2004

Kolektor group d. o. o. [SI]

Uroš Cvelbar

Plasma Treatment for Purifying Copper or Nickel

https://worldwide.espacenet.com/patent/search/family/033394282/publication/MXPA05011822A?q=pn%3DMXPA05011822A

Extended patent application

US2006054184A1

8. 11. 2005

/

Uroš Cvelbar, Miran Mozetič

Plasma Treatment for Purifying Copper or Nickel

https://worldwide.espacenet.com/patent/search/family/033394282/publication/US2006054184A1?q=pn%3DUS2006054184A1

Process for Treating a Polymer Matrix Composite Comprises Subjecting the Composite to a Large Flow of Oxygen Radicals, Removing the Surface Polymers, Increasing the Surface Roughness, and Activating the Composite

DE10320483A1

8. 5. 2003

Kolektor d. o. o. [SI]

Uroš Cvelbar, Miran Mozetič

Process for Treating a Polymer Matrix Composite Comprises Subjecting the Composite to a Large Flow of Oxygen Radicals, Removing the Surface Polymers, Increasing the Surface Roughness, and Activating the Composite [EN], Auswählendes Ätzen von Polymermatrix-Verbundstoffen [DE]

The present invention refers to a process for treating a polymer matrix composite comprising subjecting the composite to a large flow of oxygen radicals, removing the surface polymers to expose fillings by selectively etching the polymer with oxygen radicals, increasing the surface roughness of the composite by etching the polymer with oxygen radicals, and activating the composite by treating with oxygen radicals. Independent claims are also included for the following: (1) Process for roughening a polymer matrix composite; (2) Process for increasing the wettability of a polymer matrix composite or sintered carbon (or graphite); (3) Process for roughening sintered carbon or graphite; and (4) Process for cleaning sintered carbon or graphite.

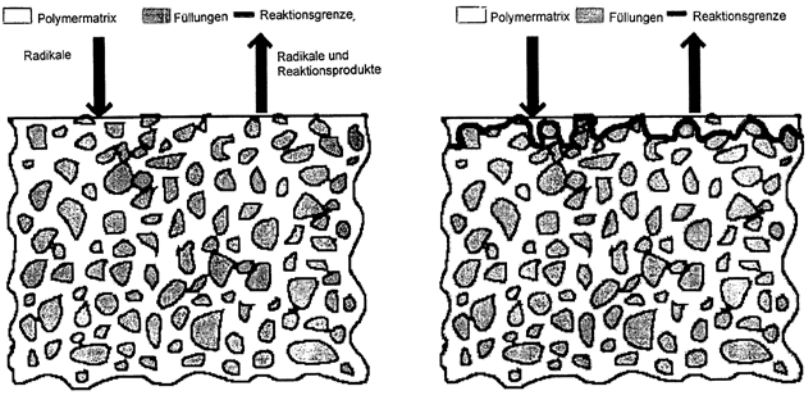

Physical Sciences

Physical and exact sciences

Industrial products, Other

https://worldwide.espacenet.com/patent/search/family/033394287/publication/DE10320483A1?q=DE2003120483

DE

2001

Procedure and Device for Determination of Specific Surface of Granulates

SI20827A

14. 2. 2001

Jožef Stefan Institute [SI]

Robert Blinc, Magda Gabrijelčič, Gojmir Lahajnar, Bojan Marin, Tanja Mlakar Ljubič, Janez Pirš, Marko Valič, Mika Vilfan, Boštjan Zalar

Postopek in naprava za določanje specifične površine granulatov [SL], Procedure and Device for Determination of Specific Surface of Granulates [EN]

The proposed invention is solving the technical problem of accurate and fast measurement of specific - active - surface of powdery substances. The procedure of determination of specific surface is based upon the controlled wetting of the investigated substance with a proper measuring liquid, i.e. a wetting agent, and upon the measurement of NMR spin-lattice relaxation (1/T1, e) of the wetting agent. The procedure assures a fast preparation of homogeneously wetted specimens having an enough small and controlled content of wetting agent to enable the measuring parameter (1/T1, e) according to the method of nuclear magnetic resonance (NMR) to be linearly related to the specific surface of the substance investigated. The measuring procedure is applicable specially to monitoring, surveillance and optimization of milling parameters in the production of cement. It can be modified without difficulties to become useful for the computer-operated instantaneous control and optimization of the grinding process in the production of cement where the NMR determination of specific surface is serving as a „sensor“ in a closed control loop.

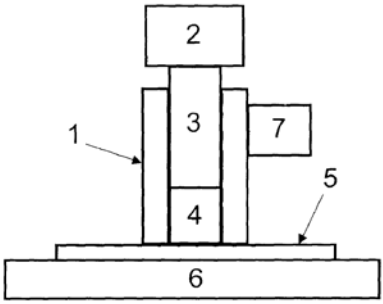

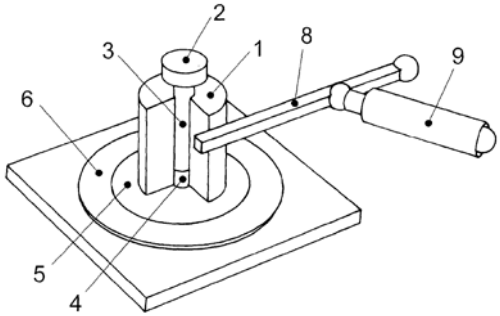

Physical Sciences

Electronics, IT and telecoms, Measurements and standards

Industrial products, Other

https://worldwide.espacenet.com/patent/search/family/020432830/publication/SI20827A?q=si20827

UIL RS

Polarization-Amplified 14N Nuclear Quadrupole Resonance Detection of TNT and Other Explosive Materials in Mines by Using Quadrupole-Quadrupole "Solid" Effect

SI20995A

3. 7. 2001

Jožef Stefan Institute [SI]

Tomaž Apih, Robert Blinc, Gojmir Lahajnar, Janez Seliger

Polarizacijsko ojačana 14N jedrska kvadrupolna resonančna detekcija TNT in drugih eksplozivnih snovi v minah s kvadrupol-kvadrupol „solid" efektom [SL], Polarization-Amplified 14N Nuclear Quadrupole Resonance Detection of TNT and Other Explosive Materials in Mines by Using Quadrupole-Quadrupole „Solid" Effect [EN]

The subject of invention is a new method for detection primarily of trinitrotoluene (TNT) and other explosives which contain NO2 groups as well as narcotics and other substances. The method according to the invention is a polarization-amplified nuclear quadrupole resonance of 14N nuclei.

The method according to the invention improves the signal-to-noise ratio for several times and reduces the time required for measurement by the order of magnitude. It is based upon transfer of polarization from the 17O quadrupole system of spins, which exhibits relatively high NQR resonance frequencies, to the 14N quadrupole system with low NQR resonance frequencies by using a quadrupole-quadrupole „solid" interaction between quadrupole nuclei 17O (I=5/2) and 14 N(I=1) in the zero external field. The method can be used also for detection of explosives in luggage and mail deliveries. Widening of this method is also possible on other quadrupole nuclei - sources of amplified polarization, such as 35Cl - so that the method is not limited only to 17O containing systems.

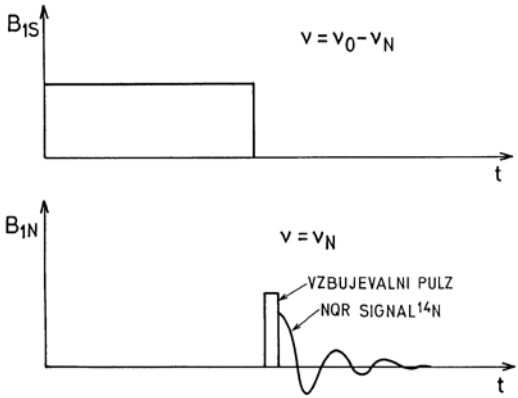

Physical Sciences

Measurements and standards, Physical and exact sciences, Protecting man and environment

Industrial products, Other

https://worldwide.espacenet.com/patent/search/family/020432933/publication/SI20995A?q=si20995

UIL RS

Integrated Position Resolver for Hybrid Synchronous Power Drives

SI21003B

3. 7. 2001

Jožef Stefan Institute [SI]

Andrej Detela, Uroš Platiše

Integrirani pozicijski resolver za hibridne sinhrone električne stroje [SL], Integrated Position Resolver for Hybrid Synchronous Power Drives [EN]

The submitted invention represents a new considerably improved integrated position resolver for hybrid synchronous power drives, where the magnetic assembly of the electric drive represents the actual magnetic resolver. The solution is achieved by the application of an additional measurement coil (1) inside the drive and by a small modification of the control electronics. The measurement coil (1) measures the variation of the magnetic flux through the permanent magnet (4), while the control electronics also takes care for a mutual phase lagging of PWR pulses in the subsequent drive phases.

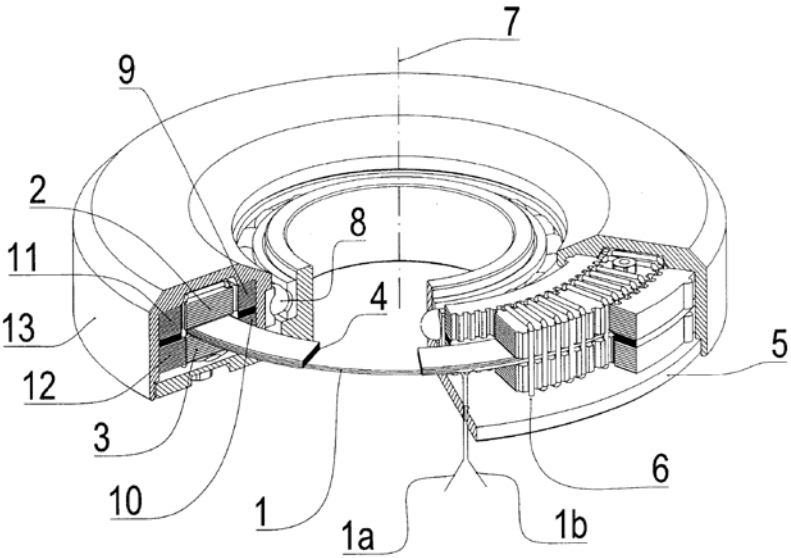

Physical Sciences

Physical and exact sciences, Electronics, IT and telecoms, Measurements and standards

Other electronics related, Industrial products

https://worldwide.espacenet.com/patent/search/family/020432934/publication/SI21003B?q=%20SI21003B

UIL RS

Extended patent application

AU2002314701A1

2. 7. 2002

Jožef Stefan Institute [SI]

Andrej Detela, Uroš Platiše

An Integrated Position Resolver for Hybrid Synchronous Electric Drives

https://worldwide.espacenet.com/patent/search/family/020432934/publication/AU2002314701A1?q=pn%3DAU2002314701A1

Extended patent application

DE10297002T5

2. 7. 2002

Jožef Stefan Institute [SI]

Andrej Detela, Uroš Platiše

Integrierter Positionsresolver für hybride synchrone Elektromotoren

https://worldwide.espacenet.com/patent/search/family/020432934/publication/DE10297002T5?q=pn%3DDE10297002T5

Extended patent application

JP2004534498A

2. 7. 2002

Jožef Stefan Institute [SI]

Andrej Detela, Uroš Platiše

An Integrated Position Resolver for Hybrid Synchronous Electric Drives

https://worldwide.espacenet.com/patent/search/family/020432934/publication/JP2004534498A?q=pn%3DJP2004534498A

Extended patent application

WO03005530A3

2. 7. 2002

Jožef Stefan Institute [SI], Andrej Detela [SI], Uroš Platiše [SI]

Andrej Detela, Uroš Platiše

An Integrated Position Resolver for Hybrid Synchronous Electric Drives

https://worldwide.espacenet.com/patent/search/family/020432934/publication/WO03005530A3?q=WO03005530A3

Hybrid Synchronous Electric Machine

JP4773053B2

9. 7. 2001

Harmonic Drive Systems [JP]

Andrej Detela

Hybrid Synchronous Electric Machine [EN]

The present invention refers to a hybrid synchronous electric machine driven by a traverse magnetic flux having a rotor and a stator, its rotor

armature (11) having a heavy weight copper ring (12) in the proximity of a motor active component, and a lateral insulation gap (22) in a toothed iron rings (14, 15), component parts of the rotor. Since an eddy current generated on iron rings (14, 15) is obstructed by the insulation gap (22) formed on the rings, an eddy current loss is small. Eddy currents produced on motor passive components (such as a rotor armature (11), a stator armature (1), and ball bearing (9)) can be neglected , because all the divergent magnetic fluxes outside a motor passive area are cancelled out by a current induced within the copper ring (12), thereby minimizing an eddy current loss to realize an energy efficient hybrid synchronous electric machine.

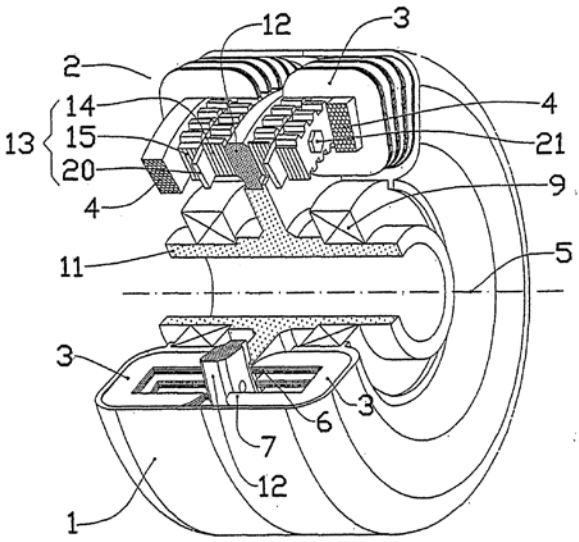

Physical Sciences

Physical and exact sciences, Other industrial technologies

Industrial products, Other

https://worldwide.espacenet.com/patent/search/family/011737532/publication/JP4773053B2?q=JP4773053B2

JP

Extended patent application

EP1416619B1

9. 7. 2001

Harmonic Drive Systems [JP]

Andrej Detela

Hybrid Synchronous Electric Machine

https://worldwide.espacenet.com/patent/search/family/011737532/publication/EP1416619B1?q=EP1416619B1

Extended patent application

WO03007459A1

9. 7. 2001

Harmonic Drive Systems [JP]

Andrej Detela

Hybrid Synchronous Electric Machine

https://worldwide.espacenet.com/patent/search/family/011737532/publication/WO03007459A1?q=pn%3DWO03007459A1

Extended patent application

SI1416619T1

9. 7. 2001

Harmonic Drive Systems [JP]

Andrej Detela

Hybrid Synchronous Electric Machine

https://worldwide.espacenet.com/patent/search/family/011737532/publication/SI1416619T1?q=SI1416619T1

Extended patent application

US7034425B2

1. 6. 2004

Harmonic Drive Systems [JP]

Andrej Detela

Hybrid Synchronous Electric Machine

https://worldwide.espacenet.com/patent/search/family/011737532/publication/US7034425B2?q=US7034425B2

Optical Catalytical Probe for Measuring Atom Concentrations of Oxygen, Nitrogen and Hydrogen in Gas or Plasma

SI20493A

16. 2. 2001

Dušan Babič [SI], Miran Mozetič [SI], Igor Poberaj [SI]

Dušan Babič, Miran Mozetič, Igor Poberaj

Optična katalitična sonda za merjenje koncentracije atomov kisika, dušika in vodika v plinu ali plazmi [SL], Optical Catalytical Probe for Measuring Atom Concentrations of Oxygen, Nitrogen and Hydrogen in Gas or Plasma [EN]

The invention covers an optical catalytic probe and a method for concentration measurement of atomic oxygen, nitrogen and hydrogen in plasma or gas. The measurement of concentration is based on exothermic catalytic recombination of atoms on the catalytic surface leading to the rise of catalyst temperature. The most important difference between the optical catalytic probe and the known catalytic probes is in the way

of catalyst temperature measurement. In optical catalytic probe the catalyst temperature is determined by measuring the thermal radiation emitted by the catalyst. The thermal radiation is transmitted via optical fiber to a detector. This approach completely eliminates the electromagnetic interference due to plasma radio-frequency generators from the signal. For the first time, optical catalytic probes make possible real time measurements of atom concentrations in plasma which gives new opportunities for development of better plasma reactors and better material processing procedures.

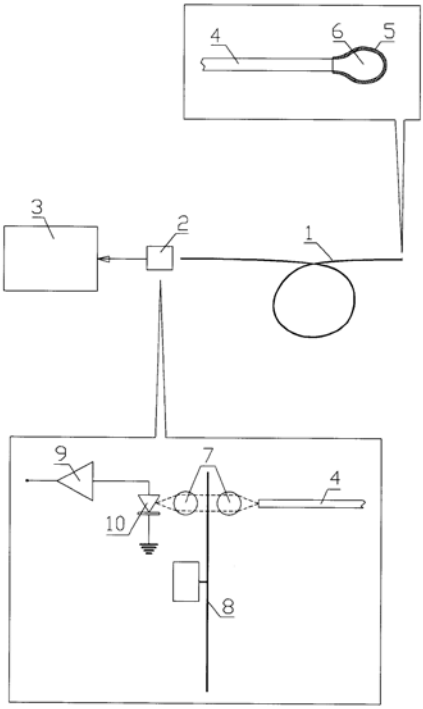

Physical Sciences

Physical and exact sciences, Measurements and standards

Industrial products, Other

https://worldwide.espacenet.com/patent/search/family/020432832/publication/SI20493A?q=si20493

UIL RS

2000

Polarisation Type Amplified 14N Nuclear Quadruple Resonance Detection of TNT and Other Explosives in Landmines

SI20551A

30. 3. 2000

Jožef Stefan Institute [SI]

Denis Arčon, Robert Blinc, Pavel Cevc, Gojmir Lahajnar, Janez Seliger

Polarizacijsko ojačana 14N jedrsko kvadrupolno resonančna detekcija TNT in drugih eksplozivnih snovi v minah [SL], Polarisation Type Amplified 14N Nuclear Quadruple Resonance Detection of TNT and Other Explosives in Landmines [EN]

The invention deals with a new polarisation type amplified 14N nuclear quadruple resonance detection of trinitrotoluene (TNT) and other explosives in plastic landmines, improving the signal noise ratio by 30 - 50 times thus decreasing the required detection time by a thousand fold or more. The detection is characterised by the fact that the hydrogen nuclei at the location of the landmine are polarised by an adequately high magnetic field and that by crossing levels 1h-14N in the external magnetic field as well as equalising Larmor's hydrogen frequency niL (1H) as well a quadruple nitrogen frequencies niq (14N) accompanied by decreasing this field to 0 and increasing the polarisation of 14N nuclei by niL (1H)/ niq(14N) compared to the balanced polarisation of nitrogen out of the magnetic field thus detecting the increased polarisation of the 14N nuclei by a classic pulse 14N JKR „remote" (remote NQR detection) technique in the zero external magnetic field or by using SQUID, and that the upper polarisation cycle of 14N nuclei as well as the detection of the 14N signal can be repeated, while the repetition time is longer than the proton spinnet relaxation time T1(1H).

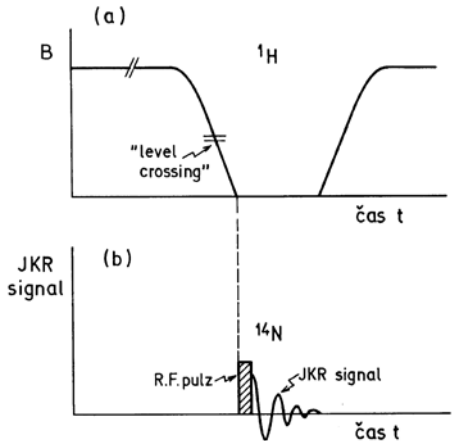

Physical Sciences

Physical and exact sciences, Measurements and standards, Protecting man and environment

Industrial products, Other

https://worldwide.espacenet.com/patent/search/family/020432631/publication/SI20551A?q=si20551

UIL RS

Magnetic System for Polarisation Amplified NQR Land Mine Detector

SI20595A

7. 6. 2000

Jožef Stefan Institute [SI]

Robert Blinc, Gojmir Lahajnar, Janko Lužnik, Janez Seliger, Zvonko Trontelj

Magnetni sistem za polarizacijsko ojačani NQR detektor min [SL], Magnetic System for Polarisation Amplified NQR Land Mine Detector [EN]

The invention deals with the use of a permanent magnet with the maximum possible energy density e.g. Nd-Fe-B magnet in combination with an

optimised magnetic mirror, and is attached to a preferably rotating support with counterweight. The large energy density of Nd-Fe-B of the permanent magnet (2), which spreads the lines of force of its magnetic field only to half of the space, which is achieved by using a magnetic mirror (3), provides the possibility of achieving a large density of the magnetic field at a distance of approximately 15 cm from the magnetic pole. Such a field is required for selective detection of landmines, containing TNT with the help of polarisation amplified 14N nuclear quadruple resonance detection of TNT. Because the magnetic system is attached to a rotating support (1), this allows repeating measurements and thus an additional improvement of the signal-noise ratio.

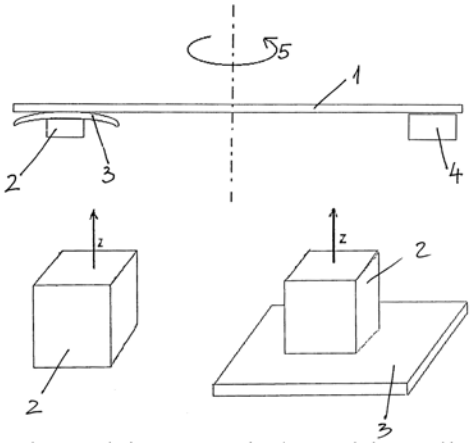

Physical Sciences

Physical and exact sciences, Measurements and standards, Protecting man and environment

Industrial products, Other

https://worldwide.espacenet.com/patent/search/family/020432670/publication/SI20595A?q=si20595

UIL RS

Cofocal Holographic Optical Memory Without Record Overlapping

SI20775A

25. 8. 2000

Jožef Stefan Institute [SI]

Marko Zgonik

Konfokalni holografski optični pomnilnik brez prekrivanja zapisov [SL], Cofocal Holographic Optical Memory Without Record Overlapping [EN]

The invention includes a method and system for storing data in the form of non-overlapping volumetric holograms. The storage media is a light sensitive material in the shape of a disk with thickness D, while the individual holograms inside it are approximately cylinder-shaped with the minimum possible diameter. The signal light beam is modulated by data and focused by a lens or appropriate optical system to the storage surface, where it illuminates a minimum surface of material compared to the quantity of data. For the recording of a hologram a reference light beam can be used, which can come to the storage surface from the same side as the signal beam or the opposite one. The invention differs from the currently known applications by the fact that the reference light beam is used for recording, which in the optimum case illuminates only the smallest possible volume of storage material. The hologram is recorded only in areas where the signal and the reference light beam overlap therefore its volume is equal to the volume, illuminated by the reference beam. Any following holograms containing data are recorded to adjacent parts of the surface, so that they do not overlap. The density of the light flux inside the panel is in the reference beam usually greater than in the signal, therefore the erasing of adjacent holograms is almost negligible. Even the reading of a hologram is non-destructive and kept to a minimum. The described invention provides the maximum possible theoretical record density.

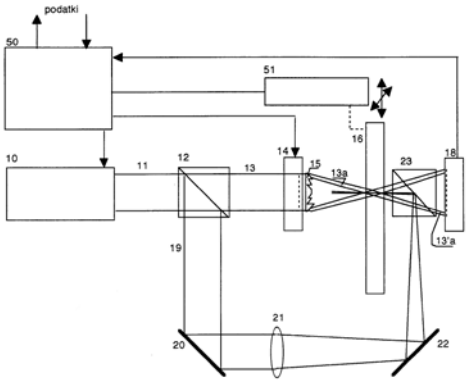

Physical Sciences

Physical and exact sciences, Electronics, IT and telecoms

Computer related, Industrial products

https://worldwide.espacenet.com/patent/search/family/020432704/publication/SI20775A?q=si20775

UIL RS

Extended patent application

AU7883701A

22. 8. 2001

Jožef Stefan Institute [SI]

Marko Zgonik

Confocal Holographic Optical Storage With Non-overlapping records

https://worldwide.espacenet.com/patent/search/family/020432704/publication/AU7883701A?q=pn%3DAU7883701A

Extended patent application

WO0221535A1

22. 8. 2001

Jožef Stefan Institute [SI], Zgonik Marko [SI]

Marko Zgonik

Confocal Holographic Optical Storage With Non-overlapping records

https://worldwide.espacenet.com/patent/search/family/020432704/publication/WO0221535A1?q=pn%3DWO0221535A1

Extended patent application

US6781725B2

19. 2. 2003

Jožef Stefan Institute [SI]

Marko Zgonik

Confocal Holographic Optical Storage With Non-overlapping records

https://worldwide.espacenet.com/patent/search/family/020432704/publication/US6781725B2?q=US6781725B2

Synchronous Hybrid Electric Machine with Toroid Coil

SI20497B

14. 1. 2000

Harmonic Drive Systems [JP]

Andrej Detela

Sinhronski hibridni električni stroj s toroidnim navitjem [SL], Synchronous Hybrid Electric Machine with Toroid Coil [EN]

The presented invention deals with a synchronous hybrid electric machine with toroid coil. It particularly applies to a synchronous hybrid electric machine allowing superior specific torque compared to conventional drives.

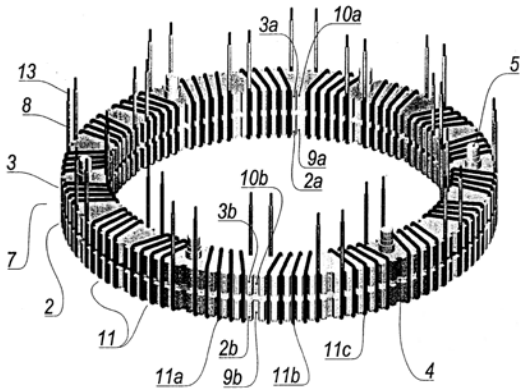

Physical Sciences

Physical and exact sciences

Energy, Industrial products, Other

https://worldwide.espacenet.com/patent/search/family/020432579/publication/SI20497B?q=SI20497B

UIL RS

Extended patent application

AU2547701A

10. 1. 2001

Harmonic Drive Systems [JP]

Andrej Detela

Synchronous Hybrid Electric Machine with Toroid Coil

https://worldwide.espacenet.com/patent/search/family/020432579/publication/AU2547701A?q=pn%3DAU2547701A

Extended patent application

DE60123726T2

10. 1. 2001

Harmonic Drive Systems [JP]

Andrej Detela

Hybrider Synchronmotor mit Ringförmiger Wicklung

https://worldwide.espacenet.com/patent/search/family/020432579/publication/DE60123726T2?q=pn%3DDE60123726T2

Extended patent application

EP1193845B1

10. 1. 2001

Harmonic Drive Systems [JP]

Andrej Detela

Hybrid Synchronous Motor Equipped with Annular Winding

https://worldwide.espacenet.com/patent/search/family/020432579/publication/EP1193845B1?q=EP1193845B1

Extended patent application

WO0152388A1

10. 1. 2001

Detela Andrej [SI], Harmonic Drive Systems [JP]

Andrej Detela

Synchronous Hybrid Electric Machine with Toroid Coil

https://worldwide.espacenet.com/patent/search/family/020432579/publication/WO0152388A1?q=WO0152388A1

Extended patent application

JP4675019B2

10. 1. 2001

Harmonic Drive Systems [JP]

Andrej Detela [SI]

/

https://worldwide.espacenet.com/patent/search/family/020432579/publication/JP4675019B2?q=pn%3DJP4675019B2

Extended patent application

US6700271B2

27. 9. 2001

Harmonic Drive Systems [JP]

Andrej Detela

Hybrid Synchronous Motor Equipped with Annular Winding

https://worldwide.espacenet.com/patent/search/family/020432579/publication/US6700271B2?q=US6700271B2

Process of Synthesis of Dichalkogenide Compounds of Transition Metals with Built-In Fullerenes

SI20586A

18. 5. 2000

Jožef Stefan Institute [SI]

Dragan D. Mihailović, Aleš Mrzel, Igor Muševič, Maja Remškar, Zora Škraba

Postopek za sintezo spojin dihalkogenidov prehodnih kovin z vgrajenimi fulereni [SL], Process of Synthesis of Dichalkogenide Compounds of Transition Metals with Built-In Fullerenes [SI]

The invention refers to the process of synthesis of dichalkogenide compounds of transition metals with built-in fullerene molecules according to the method of chemical transport. This method yields compounds with fullerene molecules built-in between chalkogenide layers. The compounds are in the

form of layered crystals and tubes. The process comprises the method of chemical transport where in addition to the halogens iodine and/or bromine fullerenes are used under conditions allowing them to be in the vapour phase.

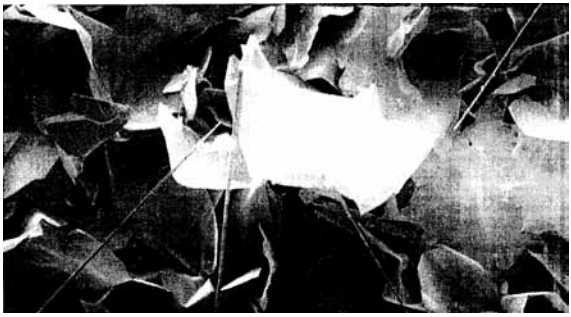

Physical Sciences

Physical and exact sciences

Industrial products, Other

https://worldwide.espacenet.com/patent/search/family/020432659/publication/SI20586A?q=si20586

UIL RS

1999

Process for Production of Compensational Polymeric Layer for LCD Optical Switches and Construction of Such a Switch

SI20291A

15. 6. 1999

Jožef Stefan Institute [SI]

Robert Blinc, Bojan Marin, Rok Petkovšek, Janez Pirš, Silva Pirš, Martin Čopič

Postopek izdelave kompenzacijske polimerne plasti za LCD optične preklopnike in konstrukcija takega preklopnika [SL], Process for Production of Compensational Polymeric Layer for LCD Optical Switches and Construction of Such a Switch [EN]

The proposed invention is solving a technical problem of compensation of the angular dependence of contrast for optical devices with liquid crystal displays (LC optical switches operating on the principle of electrically controlled optical birefringence) by means of a compensational layer exhibiting a negative optical birefringence which enables optical compensation of the angular dependence of birefringence of the LC layer in the state where the LC molecules are arranged homeotropically (a typically optically positive birefringence). The procedure of manufacture of the optically negative birefringence compensational layer is based on a controlled spontaneous deformation of polymeric molecules during the polymerisation process. The procedure is made possible by using known and well-controlled technological processes and enables a mass production of compensational layers to be carried out. The invention is solving both the process of manufacture of a compensational layer with the required optically negative birefringence and the construction/manufacturing procedure of the optical switch using such a compensational layer.

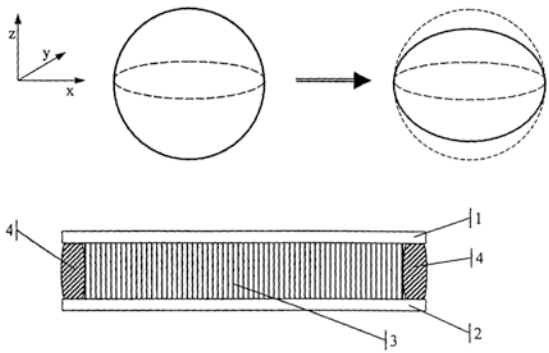

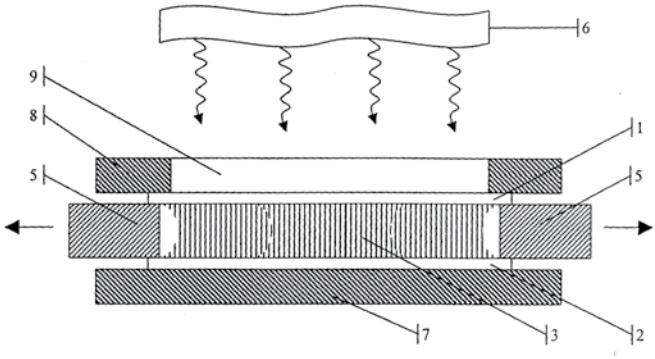

Physical Sciences

Electronics, IT and telecoms, Physical and exact sciences

Other electronics related, Industrial products

https://worldwide.espacenet.com/patent/search/family/020432499/publication/SI20291A?q=si20291

UIL RS

Extended patent application

AT324613T

12. 6. 2000

Jožef Stefan Institute [SI]

Robert Blinc, Bojan Marin, Rok Petkovšek, Janez Pirš, Silva Pirš, Martin Čopič

Verfahren Zur Herstellung Einer Polymerischen Kompensatorschicht Für Eine Flüssigkristallanzeigevorrichtung

https://worldwide.espacenet.com/patent/search/family/020432499/publication/AT324613T?q=pn%3DAT324613T

Extended patent application

DE60027565T2

12. 6. 2000

Jožef Stefan Institute [SI]

Robert Blinc, Bojan Marin, Rok Petkovšek, Janez Pirš, Silva Pirš, Martin Čopič

Verfahren Zur Herstellung Einer Polymerischen Kompensatorschicht Für Eine Flüssigkristallanzeigevorrichtung

https://worldwide.espacenet.com/patent/search/family/020432499/publication/DE60027565T2?q=DE60027565T2

Extended patent application

AU5864300A

12. 6. 2000

Jožef Stefan Institute [SI]

Robert Blinc, Bojan Marin, Rok Petkovšek, Janez Pirš, Silva Pirš, Martin Čopič

Process for The Manufacturing of the Polymer Compensation Layer for LCD Optical Light Shutter and The Construction Thereof

https://worldwide.espacenet.com/patent/search/family/020432499/publication/AU5864300A?q=pn%3DAU5864300A

Extended patent application

EP1192499B1

12. 6. 2000

Jožef Stefan Institute [SI]

Robert Blinc, Bojan Marin, Rok Petkovšek, Janez Pirš, Silva Pirš, Martin Čopič

Process for The Manufacturing of the Polymer Compensation Layer for LCD Optical Light Shutter and The Construction Thereof

https://worldwide.espacenet.com/patent/search/family/020432499/publication/EP1192499B1?q=EP1192499B1

Extended patent application

WO0077561A3

12. 6. 2000

Jožef Stefan Institute [SI], Robert Blinc [SI], Bojan Marin [SI], Rok Petkovšek [SI], Janez Pirš [SI], Silva Pirš [SI], Martin Čopič [SI]

Robert Blinc, Bojan Marin, Rok Petkovšek, Janez Pirš, Silva Pirš, Martin Čopič

Process For Manufacturing A Polymer Compensation Layer For An LCD, And Construction Of An LCD

https://worldwide.espacenet.com/patent/search/family/020432499/publication/WO0077561A3?q=WO0077561A3

Extended patent application

US7132133B1

14. 2. 2002

Jožef Stefan Institute [SI]

Robert Blinc, Bojan Marin, Rok Petkovšek, Janez Pirš, Silva Pirš, Martin Čopič

Process for The Manufacturing of the Polymer Compensation Layer for LCD Optical Light Shutter and the Construction Thereof

https://worldwide.espacenet.com/patent/search/family/020432499/publication/US7132133B1?q=US7132133B1

Part of Electronic circuit for Controlling LCD Fibre Optics Elements

SI20447A1

6. 10. 1999

Jožef Stefan Institute [SI]

Bojan Marin, Janez Pirš, Silvija Pirš, Dušan Ponikvar

Del elektronskega vezja za krmiljenje LCD elektrooptičnih elementov [SL], Part of Electronic Circuit for Controlling LCD Fibre Optics Elements [EN]

The invention deals with a part of an electronic circuit for controlling LCD fibre optics switching elements by way of alternating, rectangular power signals, with an amplitude changing between several power levels depending on the current status, so that an optimum dynamics of the fibre-optics response can be provided. The integration of power control signals for the LCD fibre optics switching device is made in such a way that the charge, which corresponds to the power control voltage for the LCD optic coupler is occasionally, but still often enough, transmitted to the integration condenser (110) with the help of a transmission condenser (101) and analogue switchers (102) and (103). The complete transmission of the charge from the transmission condenser (101) into to the integration condenser (110) is provided by two transistors (115, 116) of different polarity, where the emitter and both base junctions are connected together. The comparison of the electric power signal integral for LCD fibre optics switching elements with the reference value of Vc as well as the discharge of the integration condenser (110) is performed by two transistors (117, 118) of different polarity, where the base junction of one transistor is connected to the collector junction of the other one. The free emitter junctions are connected in parallel to the integration condenser (110), and the output signal is provided by an additional NPN transistor (119).

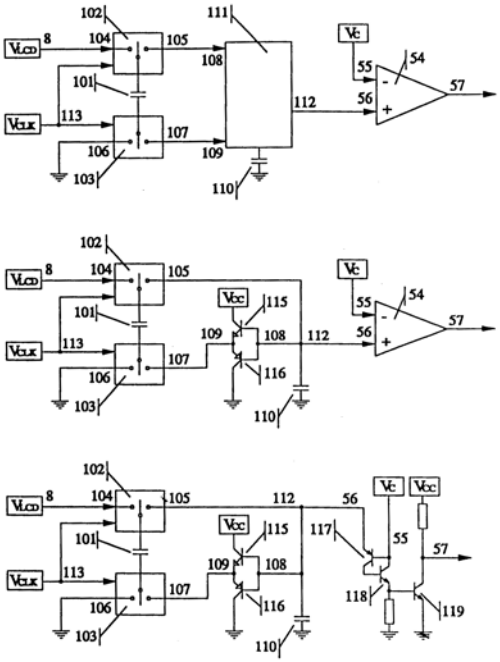

Physical Sciences

Electronics, IT and telecoms, Physical and exact sciences

Other electronics related, Industrial products

https://worldwide.espacenet.com/patent/search/family/020432543/publication/SI20447A1?q=si20447

UIL RS

Patents from the Jožef Stefan Institute 1999-2018

Publisher Center for Technology Transfer and Innovation at the Jožef Stefan Institute,
Jamova cesta 39, 1000 Ljubljana, Slovenia

Original source Patents, Patent databases, Internal databases, Scientific Articles
Introduction Dr. Š. Stres
Edited by Dr. Š. Stres, Dr. L. Pal, M. Trobec.
Technical support: T. Lutman, U. Mrgole, M. Pitako

Design Kontrastika, oblikovalski studio, d. o. o.
Printed by Kontrastika, oblikovalski studio, d. o. o.

Number of copies 500 copies
Ljubljana, July 2020

CIP - Kataložni zapis o publikaciji
Narodna in univerzitetna knjižnica, Ljubljana

061:001.894(497.4Ljubljana)"1999/2018"

INSTITUT "Jožef Stefan" (Ljubljana)
Patents from the Jožef Stefan Institute : 1999-2018 / [introduction Š. Stres ; edited by Š. Stres, L. Pal, M. Trobec]. - Ljubljana : Center for Technology Transfer and Innovation at the Jožef Stefan Institute, 2020

ISBN 978-961-264-189-4
1. Gl. stv. nasl. 2. Stres, Špela
COBISS.SI-ID 26664451

Co-financing of the Brochure:

EUROPEAN UNION
EUROPEAN REGIONAL
DEVELOPMENT FUND
INVESTING IN YOUR FUTURE

REPUBLIC OF SLOVENIA
MINISTRY OF EDUCATION, SCIENCE AND SPORT

The investment is co-financed by the Republic of Slovenia and the European Union under the European Regional Development Fund.

Jožef Stefan Institute
Jamova cesta 39
1000 Ljubljana
Slovenia

T +386 1 477 39 00
F +386 1 251 93 85
info@ijs.si

www.ijs.si

ISBN 978-961-264-189-4